This drawing was produced electronically and requires no signature.
It may not be amended manually.

Copyright © Siemens Mobility GmbH 2020 All Rights Reserved
When integrating this assembly into the plant the common rules for electrical and mechanical safety as well as the submitted documentation must be observed. Dissemination, reproduction of this drawing as well as utilization of its contents and communication thereof to others without express authorization are prohibited. Offenders will be held liable for payment of damages. All rights created by patent grant or registration of a utility model or design patent are reserved.

SIEMENS
RAIL ELECTRIFICATION

Diagrams and charts

Index	Remarks	Creator	Checker	Approver	Date
01	AS MANUFACTURED	KP	JD	FD	25.08.20

FIRST ISSUE	M 1:1 A3 EN	NAME	DATE
	Created by	Saranyoot	26.02.20
	Checked by	Jirawan	26.02.20
	Approved by	Ferreira	26.02.20

Customer	T.C. Ulaştırma ve Altyapı Bakanlığı Altyapı Yatırımları Genel Müdürlüğü ve DLH Marmaray (İstanbul) Bölge Müdürlüğü
Consult	APCO – Altınok İş Ortaklığı
Contructor	KKC Marmaray İnşaat Adi Ortaklığı Ticari İşletmesi Gayrettepe – Yeni Havalimanı Metro Hattı Projesi
End User	T.C. Ulaştırma ve Altyapı Bakanlığı Altyapı Yatırımları Genel Müdürlüğü ve DLH Marmaray (İstanbul) Bölge Müdürlüğü
Project	Gayrettepe – İstanbul Yeni Havalimanı Metro Hattı İnşaat ve Elektromekanik Sistemleri Temin, Montaj ve İşletmeye Alma İşleri
Plant	S03 Hasdal İstasyonu
Plantsection	INCOMING PANEL 2, SITRAS ® DSG, DC 1500V
Job identification / SAP	C.6633
Date of first issue	26.02.20
Customer document No.	
Workshop No.	37302
Mechanical documentation	

Document designation	=PABBD_MC13b&EAA000	+S03_MC12 / A / AA1
Producer document No.		A52811-E6914-U601-01

Labeling			Customer Drawing No.:	Drawing No.:	Page	Pages	Revision	Date	Description	Creator
=PABBD_MC13b +S03_MC12	A	AA1		A52811-E6914-U601-01	1	1	01	25.08.20	INCOMING PANEL 2 COVER SHEET REGISTER	SMO RI EL COC TPS
=PABBD_MC13b +S03_MC12	A	AB1		A52811-E6914-L602-01	1	4	01	25.08.20	INCOMING PANEL 2 LIST OF DOCUMENTS REGISTER	SMO RI EL COC TPS
=PABBD_MC13b +S03_MC12	A	AB2		A52811-E6914-L602-01	2	4	01	25.08.20	INCOMING PANEL 2 LIST OF DOCUMENTS REGISTER	SMO RI EL COC TPS
=PABBD_MC13b +S03_MC12	A	AB3		A52811-E6914-L602-01	3	4	01	25.08.20	INCOMING PANEL 2 LIST OF DOCUMENTS REGISTER	SMO RI EL COC TPS
=PABBD_MC13b +S03_MC12	A	AB4		A52811-E6914-L602-01	4	4	01	25.08.20	INCOMING PANEL 2 LIST OF DOCUMENTS REGISTER	SMO RI EL COC TPS
=PABBD_MC13b +S03_MC12	B	BD1		A52811-E6914-U610-01	1	1	01	25.08.20	INCOMING PANEL 2 RATING PLATE MARKINGS RATED VALUES OVERVIEWS	SMO RI EL COC TPS
=PABBD_MC13b +S03_MC12	B	BE1		A52811-E6914-S611-01	1	1	01	25.08.20	INCOMING PANEL 2 OVERVIEW DIAGRAM OVERVIEWS	SMO RI EL COC TPS
=PABBD_MC13b +S03_MC12	F	BI1		A52811-E6914-K615-01	1	1	01	25.08.20	INCOMING PANEL 2 CONTROL LOGIC FUNCTION DIAGRAM	SMO RI EL COC TPS
=PABBD_MC13b +S03_MC12	S	DC1		A52811-E6914-S628-01	1	1	01	25.08.20	INCOMING PANEL 2 HEATING CIRCUIT DIAGRAM	SMO RI EL COC TPS
=PABBD_MC13b +S03_MC12	S	GA1		A52811-E6914-S632-01	1	1	01	25.08.20	INCOMING PANEL 2 DC MAIN CIRCUIT CIRCUIT DIAGRAM	SMO RI EL COC TPS
=PABBD_MC13b +S03_MC12	S	GB1		A52811-E6914-S633-01	1	4	01	25.08.20	INCOMING PANEL 2 DC AUXILIARY CIRCUIT DISTRIBUTION CIRCUIT DIAGRAM	SMO RI EL COC TPS
=PABBD_MC13b +S03_MC12	S	GB2		A52811-E6914-S633-01	2	4	01	25.08.20	INCOMING PANEL 2 DC AUXILIARY CIRCUIT DISTRIBUTION CIRCUIT DIAGRAM	SMO RI EL COC TPS

This drawing was produced electronically and requires no signature.
It may not be amended manually.

Copyright © Siemens Mobility GmbH 2020 All Rights Reserved
When integrating this assembly into the plant the common rules for electrical and mechanical safety as well as the submitted documentation must be observed. Dissemination, reproduction of this drawing as well as utilization of its contents and communication thereof to others without express authorization are prohibited. Offenders will be held liable for payment of damages. All rights created by patent grant or registration of a utility model or design patent are reserved.

Labeling			Customer Drawing No.:	Drawing No.:	Page	Pages	Revision	Date	Description	Creator
=PABBD_MC13b +S03_MC12	S	GB3		A52811-E6914-S633-01	3	4	01	25.08.20	INCOMING PANEL 2 DC AUXILIARY CIRCUIT DISTRIBUTION CIRCUIT DIAGRAM	SMO RI EL COC TPS
=PABBD_MC13b +S03_MC12	S	GB4		A52811-E6914-S633-01	4	4	01	25.08.20	INCOMING PANEL 2 DC AUXILIARY CIRCUIT DISTRIBUTION CIRCUIT DIAGRAM	SMO RI EL COC TPS
=PABBD_MC13b +S03_MC12	S	MA1		A52811-E6914-S646-01	1	2	01	25.08.20	INCOMING PANEL 2 CB CONTROL CIRCUIT DIAGRAM	SMO RI EL COC TPS
=PABBD_MC13b +S03_MC12	S	MA2		A52811-E6914-S646-01	2	2	01	25.08.20	INCOMING PANEL 2 CB CONTROL CIRCUIT DIAGRAM	SMO RI EL COC TPS
=PABBD_MC13b +S03_MC12	S	NF1		A52811-E6914-S655-01	1	1	01	25.08.20	INCOMING PANEL 2 BREAKER FAILURE CIRCUIT DIAGRAM	SMO RI EL COC TPS
=PABBD_MC13b +S03_MC12	S	NG1		A52811-E6914-S656-01	1	1	01	25.08.20	INCOMING PANEL 2 FRAME FAULT PROTECTION CIRCUIT DIAGRAM	SMO RI EL COC TPS
=PABBD_MC13b +S03_MC12	S	PA1		A52811-E6914-S657-01	1	2	01	25.08.20	INCOMING PANEL 2 INTERLOCK WITH MV-SWITCHGEAR CELL RETURN LINE PANEL CIRCUIT DIAGRAM	SMO RI EL COC TPS
=PABBD_MC13b +S03_MC12	S	PA2		A52811-E6914-S657-01	2	2	01	25.08.20	INCOMING PANEL 2 INTERLOCK WITH MV-SWITCHGEAR CELL RETURN LINE PANEL CIRCUIT DIAGRAM	SMO RI EL COC TPS
=PABBD_MC13b +S03_MC12	S	QA1		A52811-E6914-S660-01	1	1	01	25.08.20	INCOMING PANEL 2 CHECK-BACK CIRCUIT CB CIRCUIT DIAGRAM	SMO RI EL COC TPS
=PABBD_MC13b +S03_MC12	S	RA1		A52811-E6914-S666-01	1	2	01	25.08.20	INCOMING PANEL 2 LOCAL INDICATIONS CIRCUIT DIAGRAM	SMO RI EL COC TPS
=PABBD_MC13b +S03_MC12	S	RA2		A52811-E6914-S666-01	2	2	01	25.08.20	INCOMING PANEL 2 OPERATION COUNTER CIRCUIT DIAGRAM	SMO RI EL COC TPS
=PABBD_MC13b +S03_MC12	S	RB1		A52811-E6914-S667-01	1	4	01	25.08.20	INCOMING PANEL 2 ALARMS CIRCUIT DIAGRAM	SMO RI EL COC TPS

This drawing was produced electronically and requires no signature.
It may not be amended manually.

Copyright © Siemens Mobility GmbH 2020 All Rights Reserved
When integrating this assembly into the plant the common rules for electrical and mechanical safety as well as the submitted documentation must be observed. Dissemination, reproduction of this drawing as well as utilization of its contents and communication thereof to others without express authorization are prohibited. Offenders will be held liable for payment of damages. All rights created by patent grant or registration of a utility model or design patent are reserved.

Labeling			Customer Drawing No.:	Drawing No.:	Page	Pages	Revision	Date	Description	Creator
=PABBD_MC13b +S03_MC12	S	RB2		A52811-E6914-S667-01	2	4	01	25.08.20	INCOMING PANEL 2 ALARMS RECTIFIER CIRCUIT DIAGRAM	SMO RI EL COC TPS
=PABBD_MC13b +S03_MC12	S	RB3		A52811-E6914-S667-01	3	4	01	25.08.20	INCOMING PANEL 2 ALARMS VOLTAGE LIMITING DEVICE PANEL CIRCUIT DIAGRAM	SMO RI EL COC TPS
=PABBD_MC13b +S03_MC12	S	RB4		A52811-E6914-S667-01	4	4	01	25.08.20	INCOMING PANEL 2 ALARMS CIRCUIT DIAGRAM	SMO RI EL COC TPS
=PABBD_MC13b +S03_MC12	T	YS1		A52811-E6914-L692-01	1	1	01	25.08.20	INCOMING PANEL 2 EQUIPMENT DESIGNATION REF. LIST PARTS LIST	SMO RI EL COC TPS
=PABBD_MC13b +S03_MC12	T	YT1		A52811-E6914-L693-01	1	4	01	25.08.20	INCOMING PANEL 2 PARTS LIST PARTS LIST	SMO RI EL COC TPS
=PABBD_MC13b +S03_MC12	T	YT2		A52811-E6914-L693-01	2	4	01	25.08.20	INCOMING PANEL 2 PARTS LIST PARTS LIST	SMO RI EL COC TPS
=PABBD_MC13b +S03_MC12	T	YT3		A52811-E6914-L693-01	3	4	01	25.08.20	INCOMING PANEL 2 PARTS LIST PARTS LIST	SMO RI EL COC TPS
=PABBD_MC13b +S03_MC12	T	YT4		A52811-E6914-L693-01	4	4	01	25.08.20	INCOMING PANEL 2 PARTS LIST PARTS LIST	SMO RI EL COC TPS
=PABBD_MC13b +S03_MC12	U	YU1		A52811-E6914-V694-01	1	5	01	25.08.20	INCOMING PANEL 2 FRONT VIEW ARRANGEMENT DRAWING	SMO RI EL COC TPS
=PABBD_MC13b +S03_MC12	U	YU2		A52811-E6914-V694-01	2	5	01	25.08.20	INCOMING PANEL 2 SECTION A - A ARRANGEMENT DRAWING	SMO RI EL COC TPS
=PABBD_MC13b +S03_MC12	U	YU3		A52811-E6914-V694-01	3	5	01	25.08.20	INCOMING PANEL 2 TRUCK VIEW ARRANGEMENT DRAWING	SMO RI EL COC TPS
=PABBD_MC13b +S03_MC12	U	YU4		A52811-E6914-V694-01	4	5	01	25.08.20	INCOMING PANEL 2 TRUCK TOP VIEW ARRANGEMENT DRAWING	SMO RI EL COC TPS

This drawing was produced electronically and requires no signature.
It may not be amended manually.

Copyright © Siemens Mobility GmbH 2020 All Rights Reserved
When integrating this assembly into the plant the common rules for electrical and mechanical safety as well as the submitted documentation must be observed. Dissemination, reproduction of this drawing as well as utilization of its contents and communication thereof to others without express authorization are prohibited. Offenders will be held liable for payment of damages. All rights created by patent grant or registration of a utility model or design patent are reserved.

Labeling			Customer Drawing No.:	Drawing No.:	Page	Pages	Revision	Date	Description	Creator
=PABBD_MC13b +S03_MC12	U	YU5		A52811-E6914-V694-01	5	5	01	25.08.20	INCOMING PANEL 2 LABELS ARRANGEMENT DRAWING	SMO RI EL COC TPS
=PABBD_MC13b +S03_MC12	V	YV1		A52811-E6914-S695-01	1	5	01	25.08.20	INCOMING PANEL 2 TERMINALS/PLUGS -XD1 TERMINAL CONNECTION TABLE	SMO RI EL COC TPS
=PABBD_MC13b +S03_MC12	V	YV2		A52811-E6914-S695-01	2	5	01	25.08.20	INCOMING PANEL 2 TERMINALS/PLUGS -XD1 TERMINAL CONNECTION TABLE	SMO RI EL COC TPS
=PABBD_MC13b +S03_MC12	V	YV3		A52811-E6914-S695-01	3	5	01	25.08.20	INCOMING PANEL 2 TERMINALS/PLUGS -XD1 TERMINAL CONNECTION TABLE	SMO RI EL COC TPS
=PABBD_MC13b +S03_MC12	V	YV4		A52811-E6914-S695-01	4	5	01	25.08.20	INCOMING PANEL 2 TERMINALS/PLUGS -XD1 TERMINAL CONNECTION TABLE	SMO RI EL COC TPS
=PABBD_MC13b +S03_MC12	V	YV5		A52811-E6914-S695-01	5	5	01	25.08.20	INCOMING PANEL 2 TERMINALS/PLUGS -XD2 TERMINAL CONNECTION TABLE	SMO RI EL COC TPS

This drawing was produced electronically and requires no signature. It may not be amended manually.

Copyright © Siemens Mobility GmbH 2020 All Rights Reserved

When integrating this assembly into the plant the common rules for electrical and mechanical safety as well as the submitted documentation must be observed. Dissemination, reproduction of this drawing as well as utilization of its contents and communication thereof to others without express authorization are prohibited. Offenders will be held liable for payment of damages. All rights created by patent grant or registration of a utility model or design patent are reserved.

100mm

SIEMENS Mobility GmbH
RAIL ELECTRIFICATION

YEAR: 2020
WORKSHOP-NO.: 37302

DC SWITCHGEAR
SITRAS ® DSG
INCOMING PANEL

=PABBD_MC13
+S03_MC12

DRAWING NUMBER: A52811 - E6914

RATED VOLTAGE MAIN CIRCUIT	U_{Ne}	= DC 1800V
RATED VOLTAGE AUXILIARY CIRCUITS	U_{Ne}	= DC 110V, DC 24V
RATED SERVICE CURRENT BUSBAR	I_{Ne}	= 7500A
RATED SERVICE CURRENT INCOMING	I_{Ne}	= 6000A
RATED SHORT-CIRCUIT CURRENT	I_{Nss}	= 80kA
RATED TRACK TIME-CONSTANT	T_{Nc}	= 31.5ms
RAT. SHORT TIME WITHST. CURR. BUSBAR	I_{Ncw}	= 150kA/0,25s
RATED EARTH FAULT CURRENT	I_{Ncwe}	= 50kA/0,25s

DEGREE OF PROTECTION: IP21

73mm

LETTER HEIGHT: 1.5mm, 2mm, 2.5mm, 3.5mm

Index	Remarks	Creat	Check	Appr	Date		Name	Date	Origin: /Replacement for: /Replaced by:
01	AS MANUFACTURED	KP	JD	FD	25.08.20	Creat.	Saranyoot	26.02.20	ISTANBUL METRO LINE 11
						Check.	Jirawan	26.02.20	S03 Hasdal İstasyonu
						Appr.	Ferreira	26.02.20	DC SWG, SITRAS ® DSG, DC 1500V

SIEMENS
Siemens Mobility GmbH
SMO RI EL COC TPS

INCOMING PANEL 2
RATING PLATE MARKINGS
RATED VALUES
OVERVIEWS

=PABBD_MC13b &EFA000
+S03_MC12 B / BD1

C.6633 EN
37302 SCL 1:1 A52811-E6914-U610-01 Page 1- of 1

A3

This drawing was produced electronically and requires no signature.
It may not be amended manually.

Copyright © Siemens Mobility GmbH 2020 All Rights Reserved
When integrating this assembly into the plant the common rules for electrical and mechanical safety as well as the submitted documentation must be observed. Dissemination, reproduction of this drawing as well as utilization of its contents and communication thereof to others without express authorization are prohibited. Offenders will be held liable for payment of damages. All rights created by patent grant or registration of a utility model or design patent are reserved.

This drawing was produced electronically and requires no signature.
It may not be amended manually.

Copyright © Siemens Mobility GmbH 2020 All Rights Reserved
When integrating this assembly into the plant the common rules for electrical and mechanical safety as well as the submitted documentation must be observed. Dissemination, reproduction of this drawing as well as utilization of its contents and communication thereof to others without express authorization are prohibited. Offenders will be held liable for payment of damages. All rights created by patent grant or registration of a utility model or design patent are reserved.

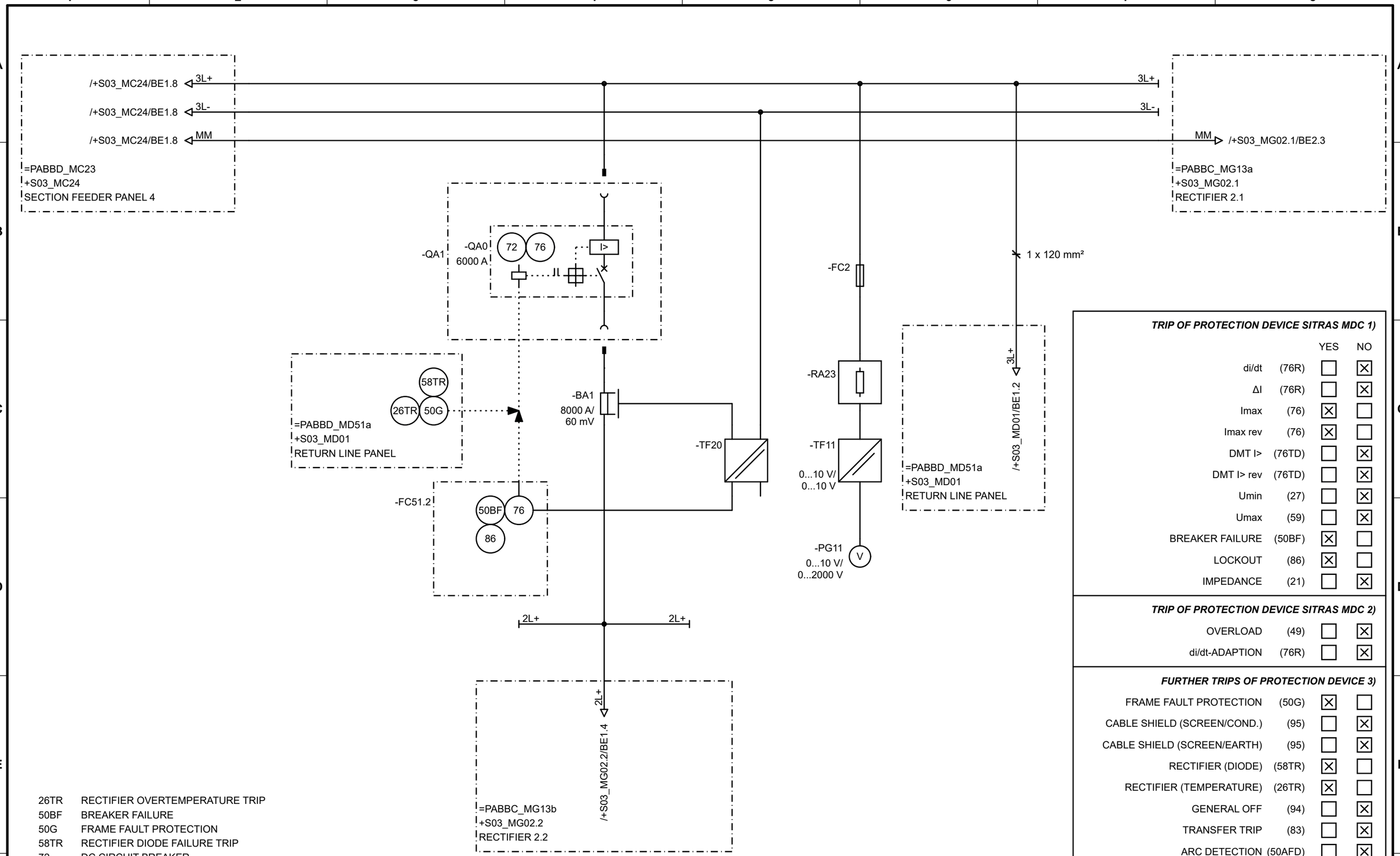

26TR RECTIFIER OVERTEMPERATURE TRIP
50BF BREAKER FAILURE
50G FRAME FAULT PROTECTION
58TR RECTIFIER DIODE FAILURE TRIP
72 DC CIRCUIT BREAKER
76 OVERCURRENT PROTECTION (Imax, Imax rev, Imax rev undir.)
86 LOCKOUT

TRIP OF PROTECTION DEVICE SITRAS MDC 1)

		YES	NO
di/dt	(76R)	☐	☒
ΔI	(76R)	☐	☒
Imax	(76)	☒	☐
Imax rev	(76)	☒	☐
DMT I>	(76TD)	☐	☒
DMT I> rev	(76TD)	☐	☒
Umin	(27)	☐	☒
Umax	(59)	☐	☒
BREAKER FAILURE	(50BF)	☒	☐
LOCKOUT	(86)	☒	☐
IMPEDANCE	(21)	☐	☒

TRIP OF PROTECTION DEVICE SITRAS MDC 2)

OVERLOAD	(49)	☐	☒
di/dt-ADAPTION	(76R)	☐	☒

FURTHER TRIPS OF PROTECTION DEVICE 3)

FRAME FAULT PROTECTION	(50G)	☒	☐
CABLE SHIELD (SCREEN/COND.)	(95)	☐	☒
CABLE SHIELD (SCREEN/EARTH)	(95)	☐	☒
RECTIFIER (DIODE)	(58TR)	☒	☐
RECTIFIER (TEMPERATURE)	(26TR)	☒	☐
GENERAL OFF	(94)	☐	☒
TRANSFER TRIP	(83)	☐	☒
ARC DETECTION	(50AFD)	☐	☒

1) AVAILABLE IN STANDARD DEVICE GENERALLY
2) ADDITIONAL OPTION (SOFTWARE)
3) ADDITIONAL OPTION (HARDWARE)

Index	Remarks	Creat	Check	Appr	Date		Name	Date
01	AS MANUFACTURED	KP	JD	FD	25.08.20	Creat.	Saranyoot	26.02.20
						Check.	Jirawan	26.02.20
						Appr.	Ferreira	26.02.20

Origin: /Replacement for: /Replaced by:

ISTANBUL METRO LINE 11
S03 Hasdal İstasyonu
DC SWG, SITRAS ® DSG, DC 1500V

SIEMENS
Siemens Mobility GmbH
SMO RI EL COC TPS

INCOMING PANEL 2
OVERVIEW DIAGRAM
OVERVIEWS

=PABBD_MC13b &EFA000
+S03_MC12 B / BE1
C.6633 EN
37302 SCL 1:1 A52811-E6914-S611-01 Page 1- of 1

A3

When integrating this assembly into the plant the common rules for electrical and mechanical safety as well as the submitted documentation must be observed. Dissemination, reproduction of this drawing as well as utilization of its contents and communication thereof to others without express authorization are prohibited. Offenders will be held liable for payment of damages. All rights created by patent grant or registration of a utility model or design patent are reserved.

Copyright © Siemens Mobility GmbH, 2020. All Rights Reserved

This drawing was produced electronically and requires no signature. It may not be amended manually.

LEGEND:
CB: CIRCUIT BREAKER
BD: BYPASS DISCONNECTOR
MV-CB: MEDIUM-VOLTAGE CIRCUIT BREAKER

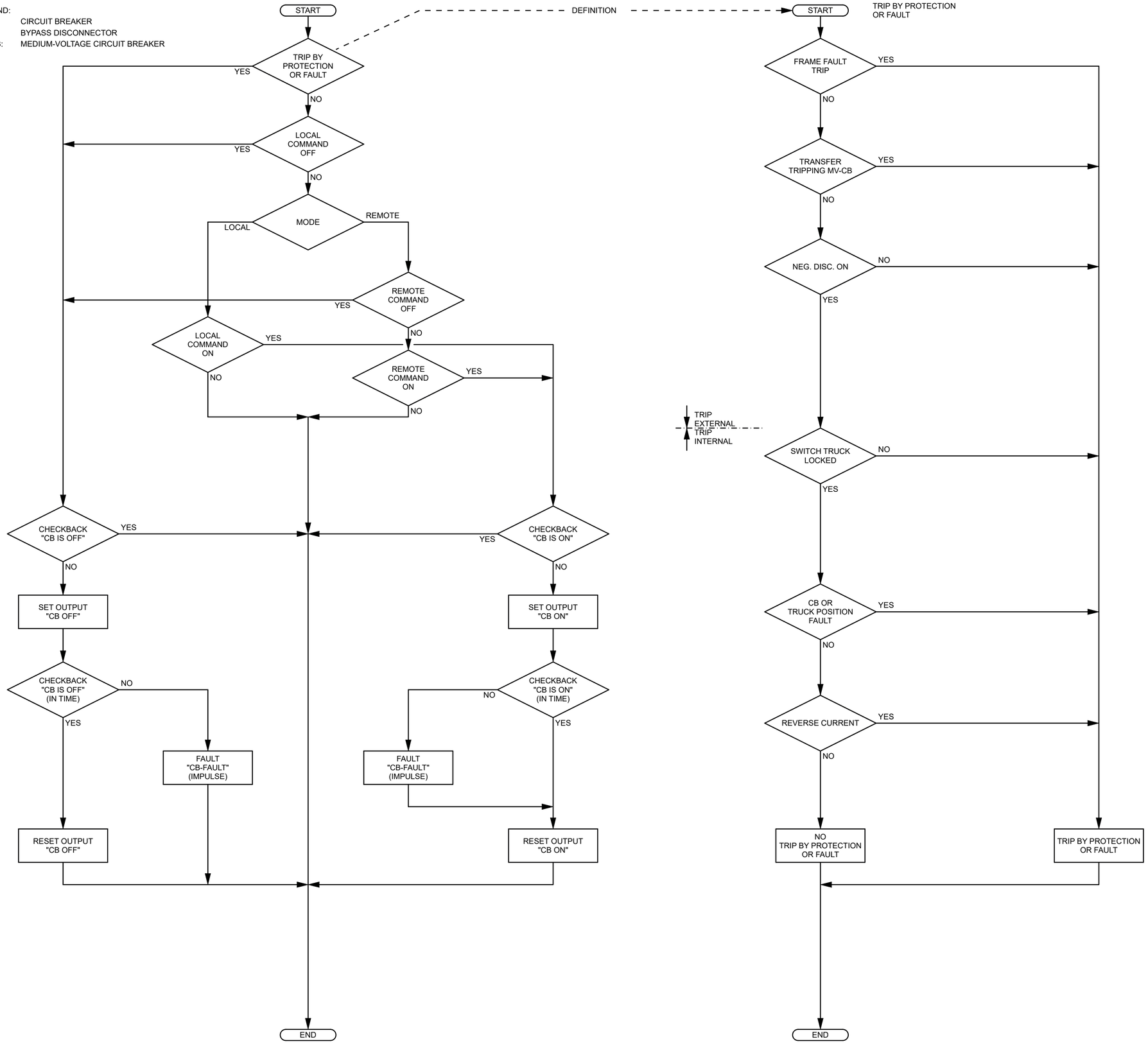

01	AS MANUFACTURED	KP	JD	FD	25.08.20	Creat.	Saranyoot	26.02.20	ISTANBUL METRO LINE 11	SIEMENS	INCOMING PANEL 2		=PABBD_MC13b	&EFA000
						Check.	Jirawan	26.02.20	S03 Hasdal İstasyonu		CONTROL LOGIC		+S03_MC12	B / BI1
						Appr.	Ferreira	26.02.20	DC SWG, SITRAS ® DSG, DC 1500V	Siemens Mobility GmbH		C.6633	EN	
Index	Remarks	Creat	Check	Appr	Date		Name	Date	Origin: /Replacement for: /Replaced by:	SMO RI EL COC TPS	FUNCTION DIAGRAM	37302	SCL 1:1	A52811-E6914-K615-01 Page 1- of 1

A2

Copyright © Siemens Mobility GmbH 2020 All Rights Reserved
When integrating this assembly into the plant the common rules for electrical and mechanical safety as well as the submitted documentation must be observed. Dissemination, reproduction of this drawing as well as utilization of its contents and communication thereof to others without express authorization are prohibited. Offenders will be held liable for payment of damages. All rights created by patent grant or registration of a utility model or design patent are reserved.
This drawing was produced electronically and requires no signature. It may not be amended manually.

LOW VOLTAGE COMPART.
HEATING

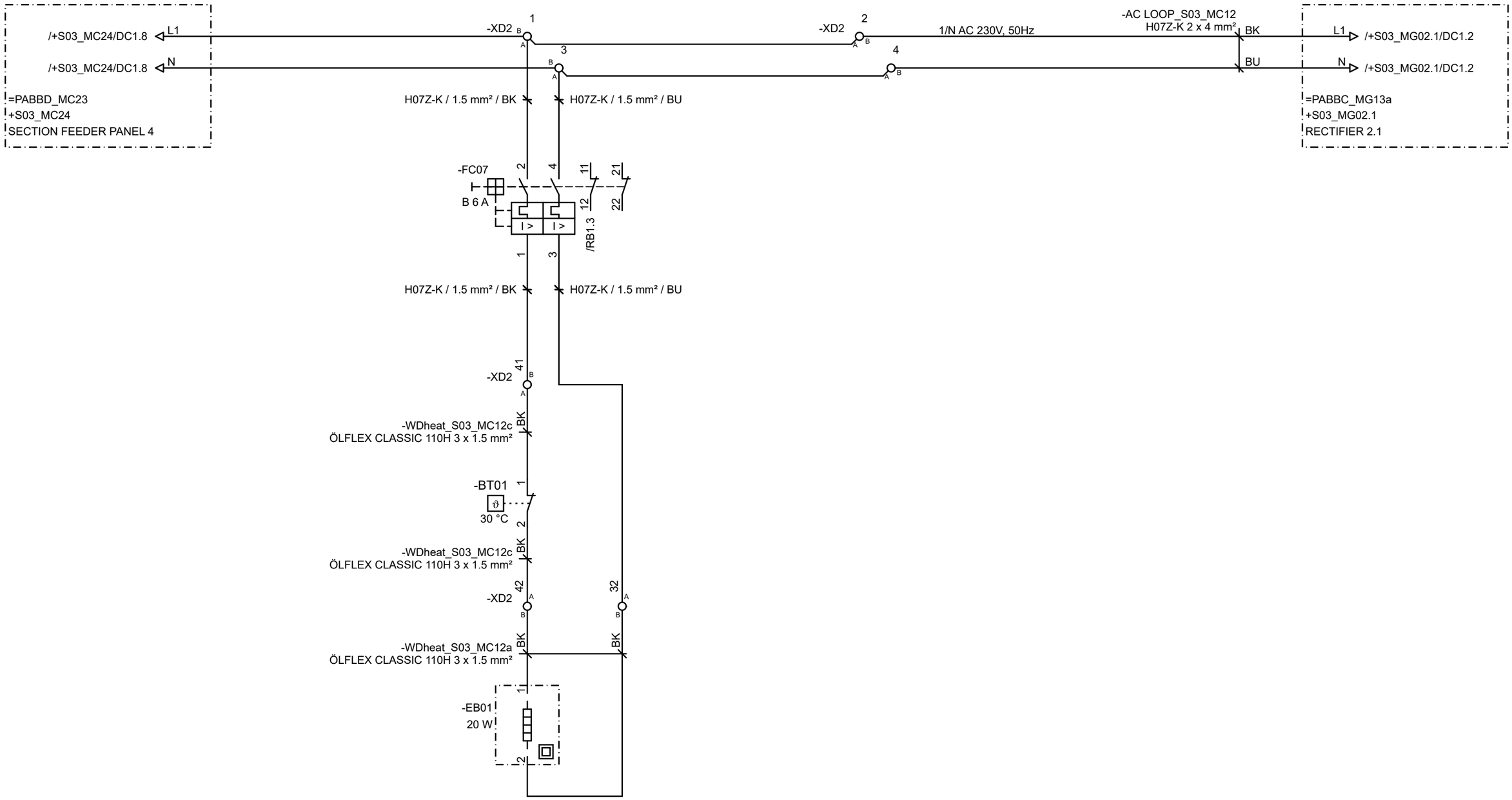

01	AS MANUFACTURED	KP	JD	FD	25.08.20	Creat.	Saranyoot	26.02.20	ISTANBUL METRO LINE 11	SIEMENS	INCOMING PANEL 2			=PABBD_MC13b	&EFS000
						Check.	Jirawan	26.02.20	S03 Hasdal İstasyonu	Siemens Mobility GmbH	HEATING			+S03_MC12	S / DC1
						Appr.	Ferreira	26.02.20	DC SWG, SITRAS ® DSG, DC 1500V			C.6633	EN		
Index	Remarks	Creat	Check	Appr	Date		Name	Date	Origin: /Replacement for: /Replaced by:	SMO RI EL COC TPS	CIRCUIT DIAGRAM	37302	SCL 1:1	A52811-E6914-S628-01	Page 1- of 1

A3

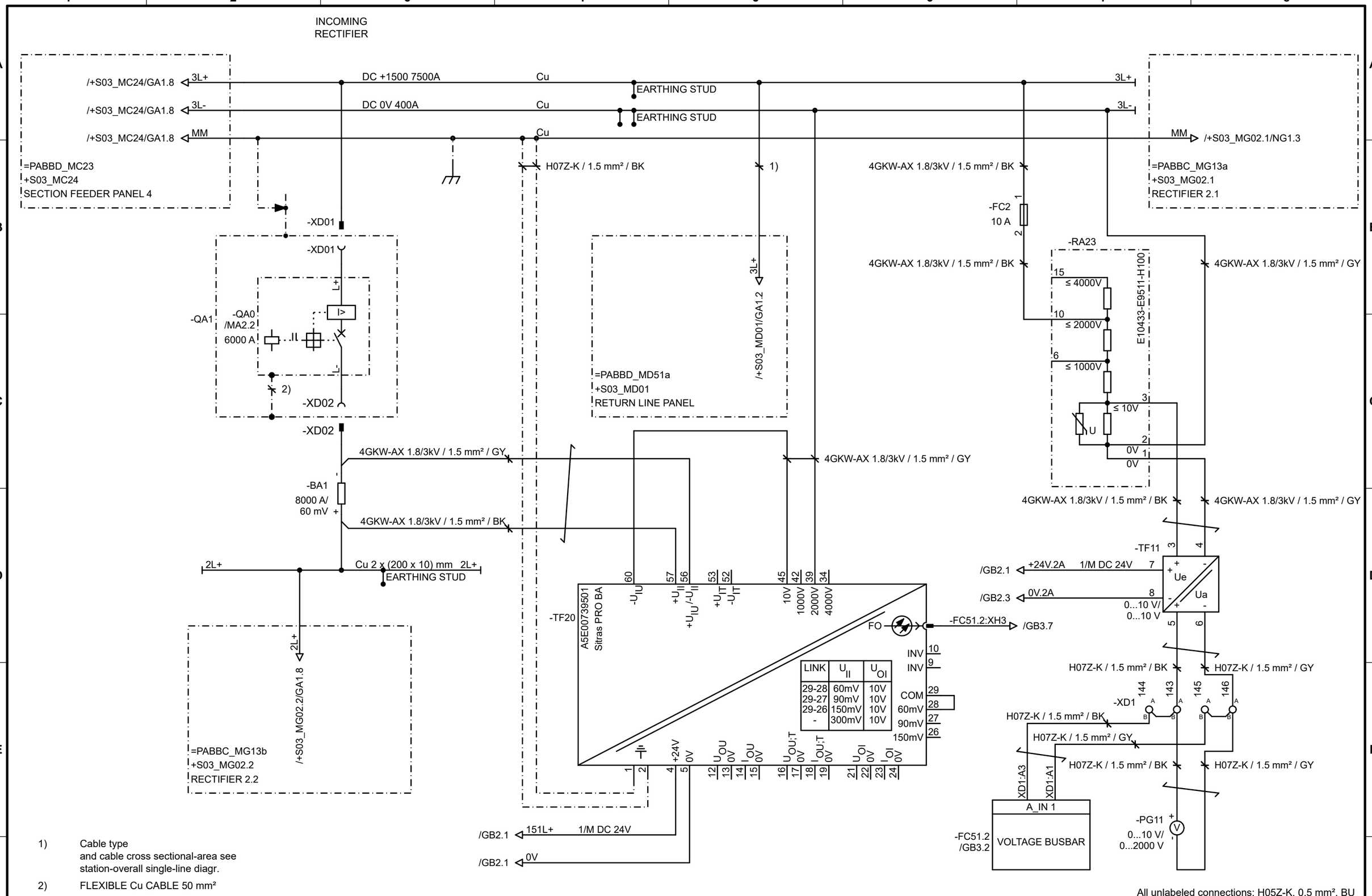

1) Cable type
and cable cross sectional-area see
station-overall single-line diagr.

2) FLEXIBLE Cu CABLE 50 mm²

01	AS MANUFACTURED	KP	JD	FD	25.08.20	Creat.	Saranyoot	26.02.20	ISTANBUL METRO LINE 11	SIEMENS	INCOMING PANEL 2	=PABBD_MC13b	&EFS000
						Check.	Jirawan	26.02.20	S03 Hasdal İstasyonu	Siemens Mobility GmbH	DC MAIN CIRCUIT	+S03_MC12	S / GA1
						Appr.	Ferreira	26.02.20	DC SWG, SITRAS ® DSG, DC 1500V	SMO RI EL COC TPS	CIRCUIT DIAGRAM	C.6633 EN	
Index	Remarks	Creat	Check	Appr	Date		Name	Date	Origin: /Replacement for: /Replaced by:			37302 SCL 1:1	A52811-E6914-S632-01 Page 1- of 1

A3

This drawing was produced electronically and requires no signature.
It may not be amended manually.

Copyright © Siemens Mobility GmbH 2020 All Rights Reserved
When integrating this assembly into the plant the common rules for electrical and mechanical safety as well as the submitted documentation must be observed. Dissemination, reproduction of this drawing as well as utilization of its contents and communication thereof to others without express authorization are prohibited. Offenders will be held liable for payment of damages. All rights created by patent grant or registration of a utility model or design patent are reserved.

This drawing was produced electronically and requires no signature.
It may not be amended manually.

Copyright © Siemens Mobility GmbH 2020 All Rights Reserved
When integrating this assembly into the plant the common rules for electrical and mechanical safety as well as the submitted documentation must be observed. Dissemination, reproduction of this drawing as well as utilization of its contents and communication thereof to others without express authorization are prohibited. Offenders will be held liable for payment of damages. All rights created by patent grant or registration of a utility model or design patent are reserved.

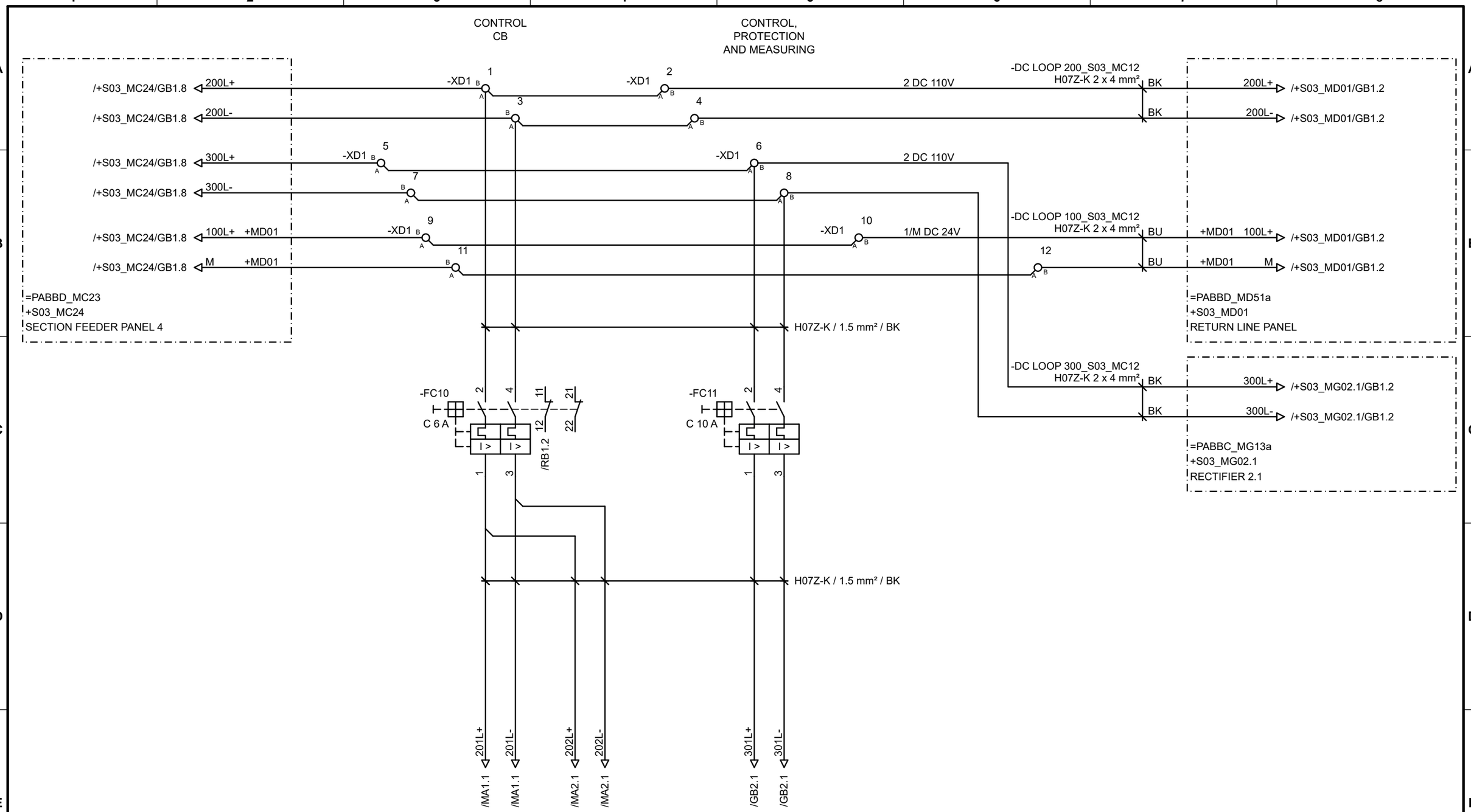

All unlabeled connections: H05Z-K, 0.5 mm², BU

F	01	AS MANUFACTURED	KP	JD	FD	25.08.20	Creat.	Saranyoot	26.02.20	ISTANBUL METRO LINE 11	SIEMENS	INCOMING PANEL 2		=PABBD_MC13b	&EFS000
							Check.	Jirawan	26.02.20	S03 Hasdal İstasyonu		DC AUXILIARY CIRCUIT DISTRIBUTION		+S03_MC12	S / GB1
							Appr.	Ferreira	26.02.20	DC SWG, SITRAS ® DSG, DC 1500V	Siemens Mobility GmbH		C.6633	EN	
	Index	Remarks	Creat	Check	Appr	Date		Name	Date	Origin: /Replacement for: /Replaced by:	SMO RI EL COC TPS	CIRCUIT DIAGRAM	37302	SCL 1:1	A52811-E6914-S633-01 Page 1+ of 4

1 2 3 4 5 6 7 A3

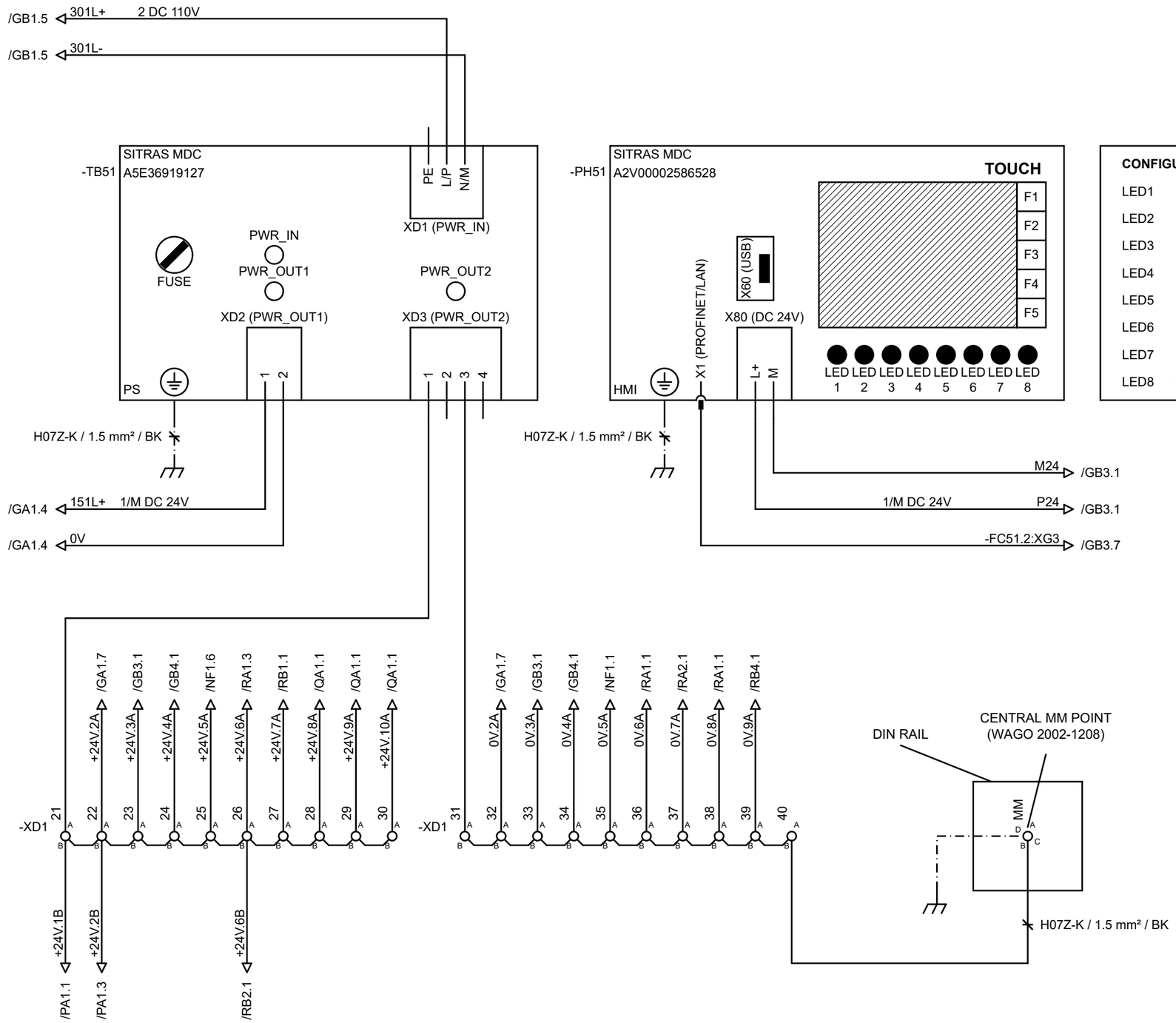

CONFIGURATION OF LED's AND BUTTONS

LED1	GROUP ALARM 1)		F1	CB OFF
LED2	Imax. TRIP		F2	CB ON
LED3	SPARE		F3	SPARE
LED4	SPARE		F4	SPARE
LED5	SPARE		F5	LOCAL/REMOTE
LED6	SPARE			
LED7	SPARE			
LED8	LOCAL			

1) OVERCURRENT TRIP
MCB TRIP
FRAME FAULT TRIP
CB TROUBLE
TRUCK TROUBLE
SYSTEM TROUBLE
REVERSE CURRENT
BREAKER FAILURE TRIP

All unlabeled connections: H05Z-K, 0.5 mm², BU

01	AS MANUFACTURED	KP	JD	FD	25.08.20	Creat.	Saranyoot	26.02.20	ISTANBUL METRO LINE 11	SIEMENS	INCOMING PANEL 2		=PABBD_MC13b	&EFS000
						Check.	Jirawan	26.02.20	S03 Hasdal İstasyonu	Siemens Mobility GmbH	DC AUXILIARY CIRCUIT DISTRIBUTION		+S03_MC12	S / GB2
						Appr.	Ferreira	26.02.20	DC SWG, SITRAS ® DSG, DC 1500V	SMO RI EL COC TPS		C.6633	EN	
Index	Remarks	Creat	Check	Appr	Date		Name	Date	Origin: /Replacement for: /Replaced by:		CIRCUIT DIAGRAM	37302	SCL 1:1	A52811-E6914-S633-01 Page 2+ of 4

A3

This drawing was produced electronically and requires no signature. It may not be amended manually.

Copyright © Siemens Mobility GmbH 2020 All Rights Reserved
When integrating this assembly into the plant the common rules for electrical and mechanical safety as well as the submitted documentation must be observed. Dissemination, reproduction of this drawing as well as utilization of its contents and communication thereof to others without express authorization are prohibited. Offenders will be held liable for payment of damages. All rights created by patent grant or registration of a utility model or design patent are reserved.

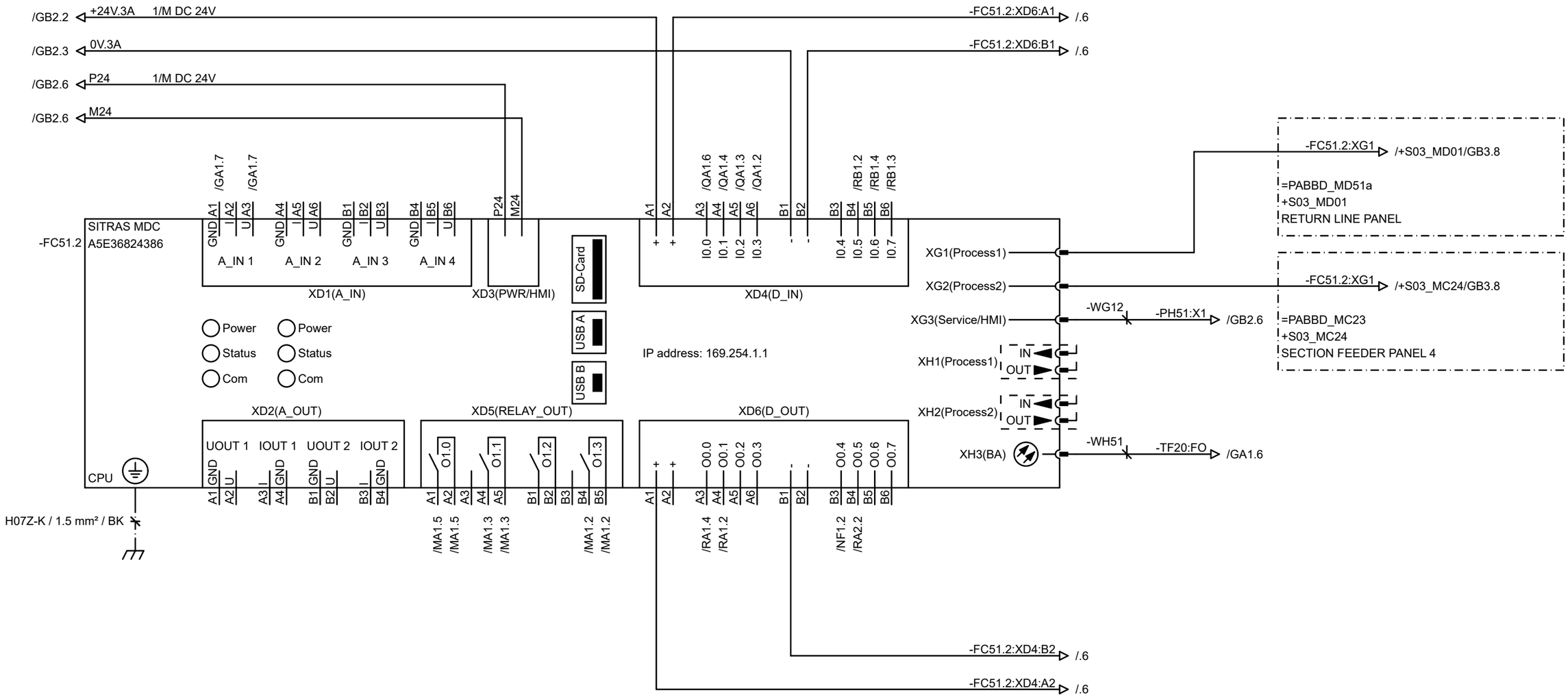

All unlabeled connections: H05Z-K, 0.5 mm², BU

01	AS MANUFACTURED	KP	JD	FD	25.08.20	Creat.	Saranyoot	26.02.20	ISTANBUL METRO LINE 11	SIEMENS	INCOMING PANEL 2		=PABBD_MC13b	&EFS000
						Check.	Jirawan	26.02.20	S03 Hasdal İstasyonu	Siemens Mobility GmbH	DC AUXILIARY CIRCUIT DISTRIBUTION		+S03_MC12	S / GB3
						Appr.	Ferreira	26.02.20	DC SWG, SITRAS ® DSG, DC 1500V			C.6633	EN	
Index	Remarks	Creat	Check	Appr	Date		Name	Date	Origin: /Replacement for: /Replaced by:	SMO RI EL COC TPS	CIRCUIT DIAGRAM	37302	SCL 1:1	A52811-E6914-S633-01 Page 3+ of 4

A3

This drawing was produced electronically and requires no signature. It may not be amended manually.

Copyright © Siemens Mobility GmbH 2020 All Rights Reserved

When integrating this assembly into the plant the common rules for electrical and mechanical safety as well as the submitted documentation must be observed. Dissemination, reproduction of this drawing as well as utilization of its contents and communication thereof to others without express authorization are prohibited. Offenders will be held liable for payment of damages. All rights created by patent grant or registration of a utility model or design patent are reserved.

Copyright © Siemens Mobility GmbH 2020 All Rights Reserved
When integrating this assembly into the plant the common rules for electrical and mechanical safety as well as the submitted documentation must be observed. Dissemination, reproduction of this drawing as well as utilization of its contents and communication thereof to others without express authorization are prohibited. Offenders will be held liable for payment of damages. All rights created by patent grant or registration of a utility model or design patent are reserved.
This drawing was produced electronically and requires no signature. It may not be amended manually.

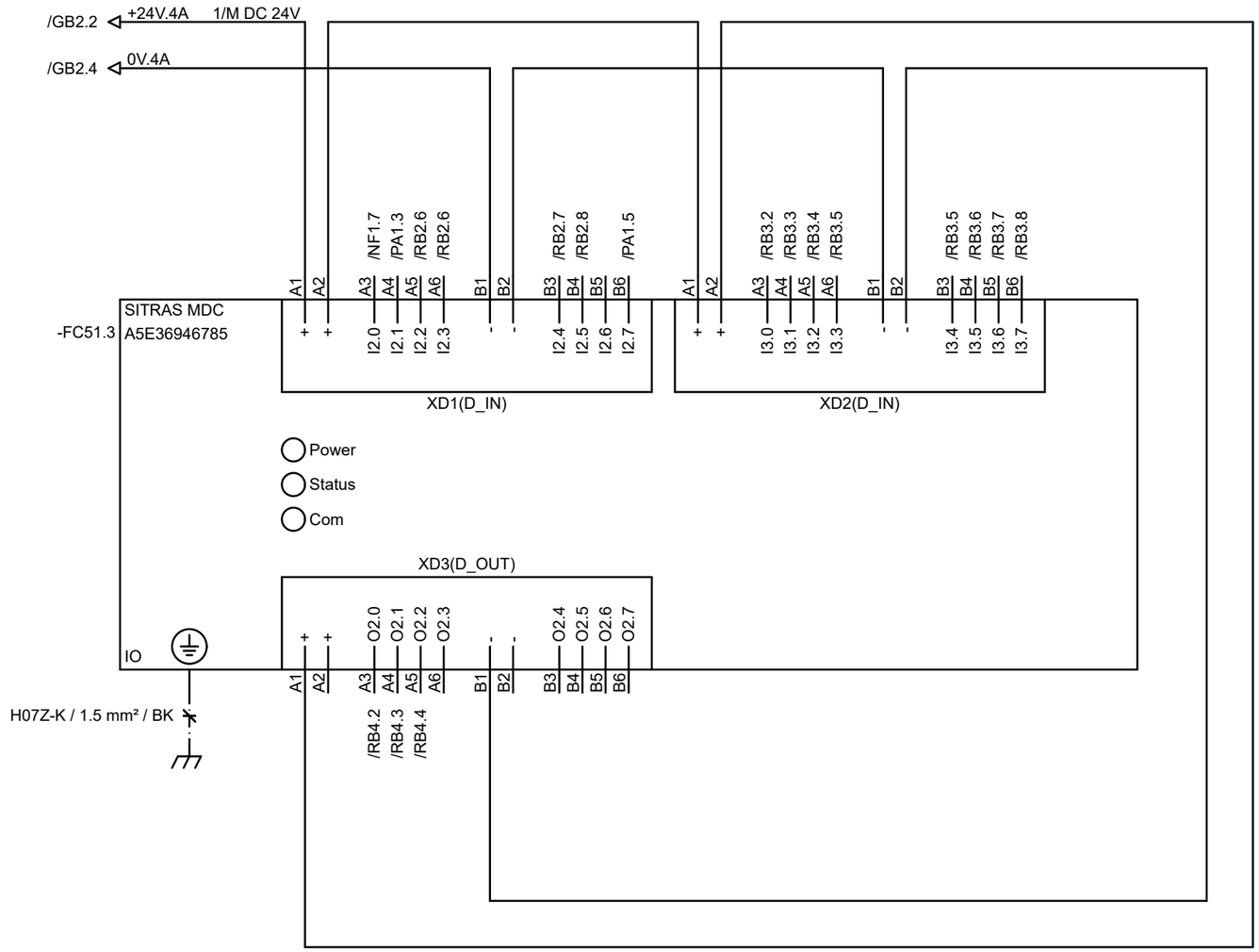

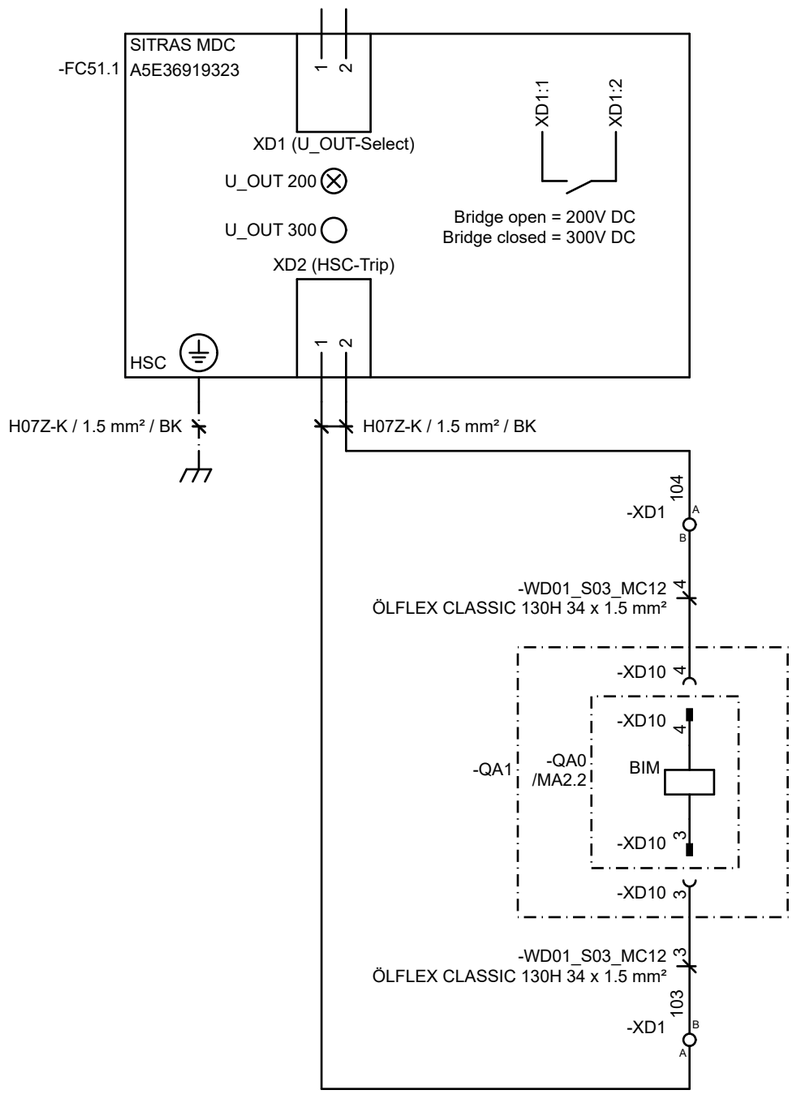

All unlabeled connections: H05Z-K, 0.5 mm², BU

01	AS MANUFACTURED	KP	JD	FD	25.08.20	Creat.	Saranyoot	26.02.20	ISTANBUL METRO LINE 11	SIEMENS	INCOMING PANEL 2			=PABBD_MC13b	&EFS000
						Check.	Jirawan	26.02.20	S03 Hasdal İstasyonu	Siemens Mobility GmbH	DC AUXILIARY CIRCUIT DISTRIBUTION			+S03_MC12	S / GB4
						Appr.	Ferreira	26.02.20	DC SWG, SITRAS ® DSG, DC 1500V			C.6633	EN		
Index	Remarks	Creat	Check	Appr	Date		Name	Date	Origin: /Replacement for: /Replaced by:	SMO RI EL COC TPS	CIRCUIT DIAGRAM	37302	SCL 1:1	A52811-E6914-S633-01	Page 4- of 4

A3

Copyright © Siemens Mobility GmbH 2020 All Rights Reserved
This drawing was produced electronically and requires no signature.
It may not be amended manually.
When integrating this assembly into the plant the common rules for electrical and mechanical safety as well as the submitted documentation must be observed. Dissemination, reproduction of this drawing as well as utilization of its contents and communication thereof to others without express authorization are prohibited. Offenders will be held liable for payment of damages. All rights created by patent grant or registration of a utility model or design patent are reserved.

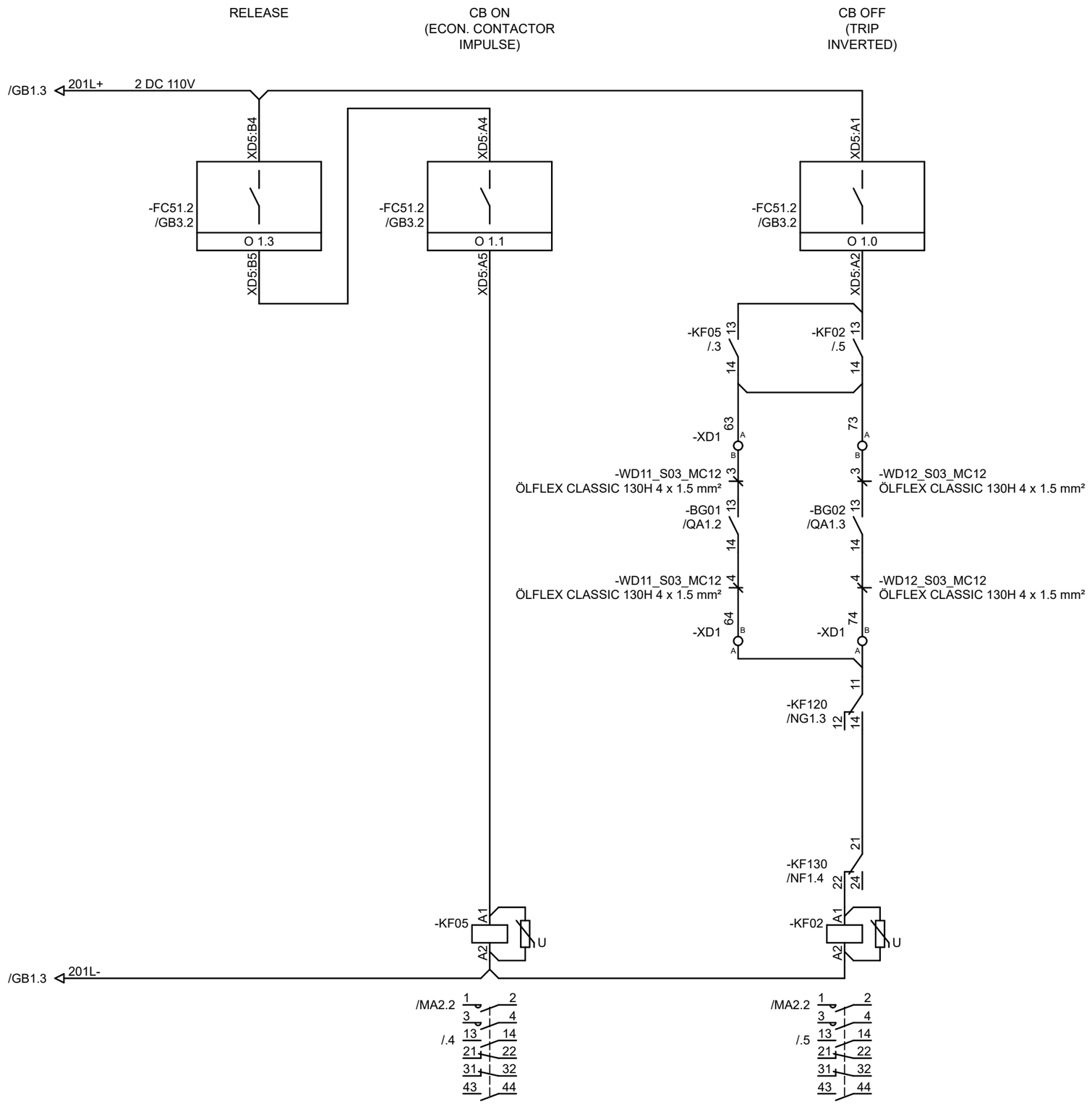

All unlabeled connections: H07Z-K, 1.5 mm², BK

01	AS MANUFACTURED	KP	JD	FD	25.08.20	Creat.	Saranyoot	26.02.20	ISTANBUL METRO LINE 11	SIEMENS	INCOMING PANEL 2			=PABBD_MC13b	&EFS000
						Check.	Jirawan	26.02.20	S03 Hasdal İstasyonu	Siemens Mobility GmbH	CB CONTROL			+S03_MC12	S / MA1
						Appr.	Ferreira	26.02.20	DC SWG, SITRAS ® DSG, DC 1500V			C.6633	EN		
Index	Remarks	Creat	Check	Appr	Date		Name	Date	Origin: /Replacement for: /Replaced by:	SMO RI EL COC TPS	CIRCUIT DIAGRAM	37302	SCL 1:1	A52811-E6914-S646-01	Page 1+ of 2

1 2 3 4 5 6 7 A3

Copyright © Siemens Mobility GmbH 2020 All Rights Reserved
This drawing was produced electronically and requires no signature.
It may not be amended manually.
When integrating this assembly into the plant the common rules for electrical and mechanical safety as well as the submitted documentation must be observed. Dissemination, reproduction of this drawing as well as utilization of its contents and communication thereof to others without express authorization are prohibited. Offenders will be held liable for payment of damages. All rights created by patent grant or registration of a utility model or design patent are reserved.

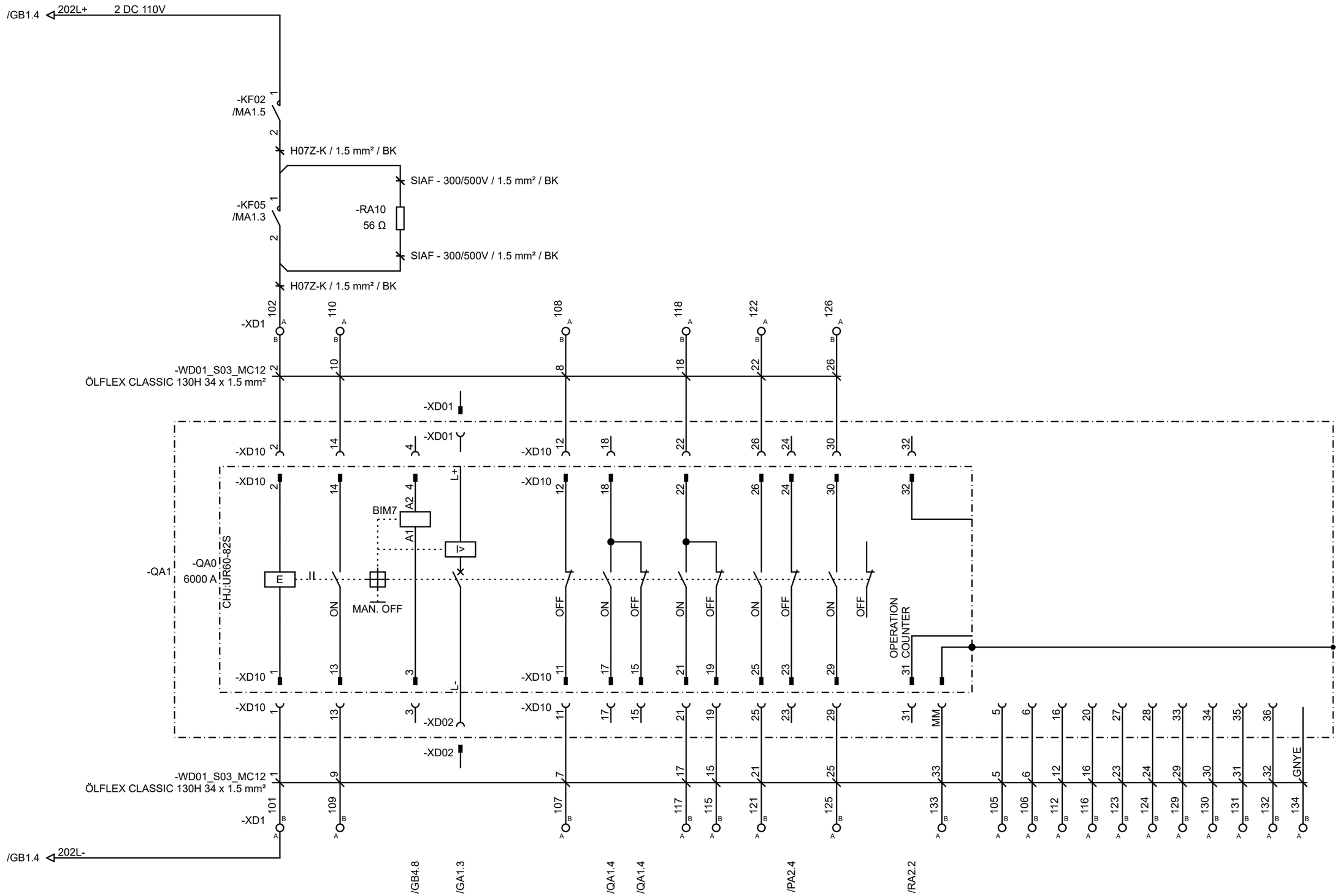

All unlabeled connections: H05Z-K, 0.5 mm², BU

01	AS MANUFACTURED	KP	JD	FD	25.08.20	Creat.	Saranyoot	26.02.20	ISTANBUL METRO LINE 11	SIEMENS	INCOMING PANEL 2		=PABBD_MC13b	&EFS000
						Check.	Jirawan	26.02.20	S03 Hasdal İstasyonu	Siemens Mobility GmbH	CB CONTROL		+S03_MC12	S / MA2
						Appr.	Ferreira	26.02.20	DC SWG, SITRAS ® DSG, DC 1500V	SMO RI EL COC TPS	CIRCUIT DIAGRAM	C.6633 / 37302	EN / SCL 1:1	A52811-E6914-S646-01
Index	Remarks	Creat	Check	Appr	Date		Name	Date	Origin: /Replacement for: /Replaced by:					Page 2- of 2

1 2 3 4 5 6 7 A3

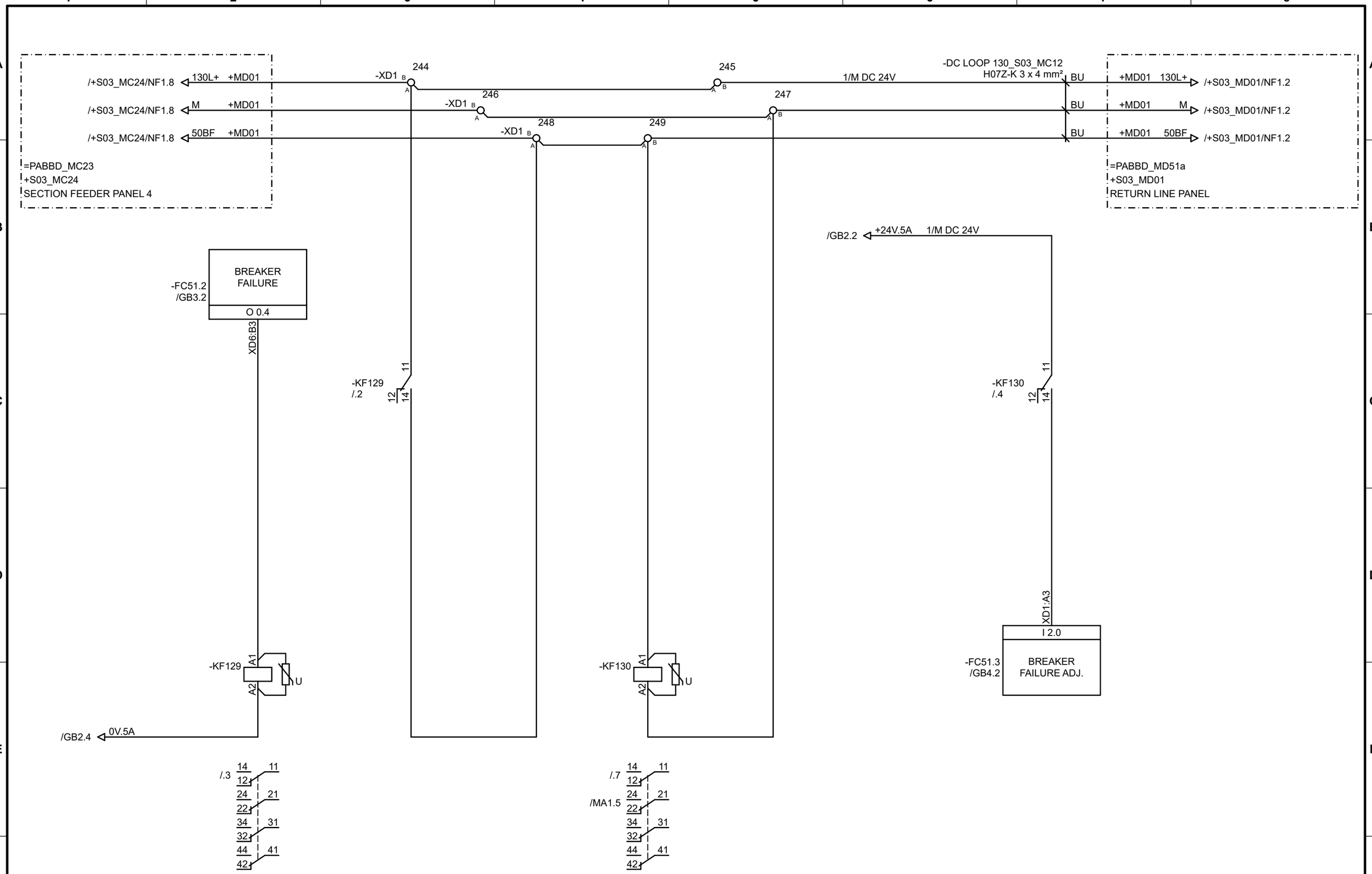

01	AS MANUFACTURED	KP	JD	FD	25.08.20	Creat.	Saranyoot	26.02.20	ISTANBUL METRO LINE 11	SIEMENS	INCOMING PANEL 2		=PABBD_MC13b	&EFS000
						Check.	Jirawan	26.02.20	S03 Hasdal İstasyonu	Siemens Mobility GmbH	BREAKER FAILURE		+S03_MC12	S / NF1
						Appr.	Ferreira	26.02.20	DC SWG, SITRAS ® DSG, DC 1500V	SMO RI EL COC TPS	CIRCUIT DIAGRAM	C.6633 / 37302	EN / SCL 1:1	A52811-E6914-S655-01 Page 1- of 1
Index	Remarks	Creat	Check	Appr	Date		Name	Date	Origin: /Replacement for: /Replaced by:					

This drawing was produced electronically and requires no signature. It may not be amended manually.

Copyright © Siemens Mobility GmbH 2020 All Rights Reserved

When integrating this assembly into the plant the common rules for electrical and mechanical safety as well as the submitted documentation must be observed. Dissemination, reproduction of this drawing as well as utilization of its contents and communication thereof to others without express authorization are prohibited. Offenders will be held liable for payment of damages. All rights created by patent grant or registration of a utility model or design patent are reserved.

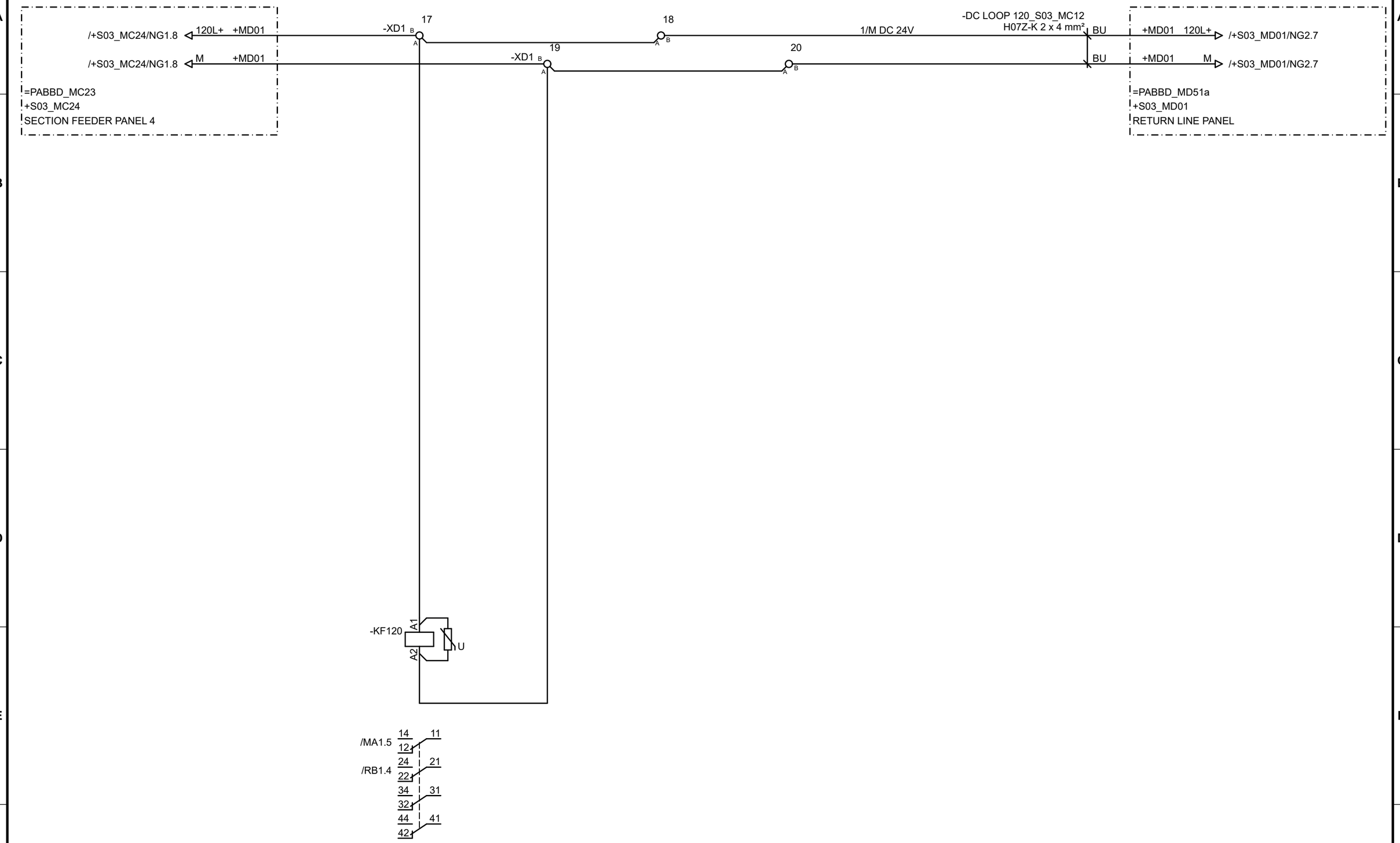

All unlabeled connections: H05Z-K, 0.5 mm², BU

01	AS MANUFACTURED	KP	JD	FD	25.08.20	Creat.	Saranyoot	26.02.20	ISTANBUL METRO LINE 11	SIEMENS	INCOMING PANEL 2			=PABBD_MC13b	&EFS000
						Check.	Jirawan	26.02.20	S03 Hasdal İstasyonu		FRAME FAULT PROTECTION			+S03_MC12	S / NG1
						Appr.	Ferreira	26.02.20	DC SWG, SITRAS ® DSG, DC 1500V	Siemens Mobility GmbH		C.6633	EN		
Index	Remarks	Creat	Check	Appr	Date		Name	Date	Origin: /Replacement for: /Replaced by:	SMO RI EL COC TPS	CIRCUIT DIAGRAM	37302	SCL 1:1	A52811-E6914-S656-01	Page 1- of 1

1 2 3 4 5 6 7 A3

This drawing was produced electronically and requires no signature.
It may not be amended manually.

Copyright © Siemens Mobility GmbH 2020 All Rights Reserved
When integrating this assembly into the plant the common rules for electrical and mechanical safety as well as the submitted documentation must be observed. Dissemination, reproduction of this drawing as well as utilization of its contents and communication thereof to others without express authorization are prohibited. Offenders will be held liable for payment of damages. All rights created by patent grant or registration of a utility model or design patent are reserved.

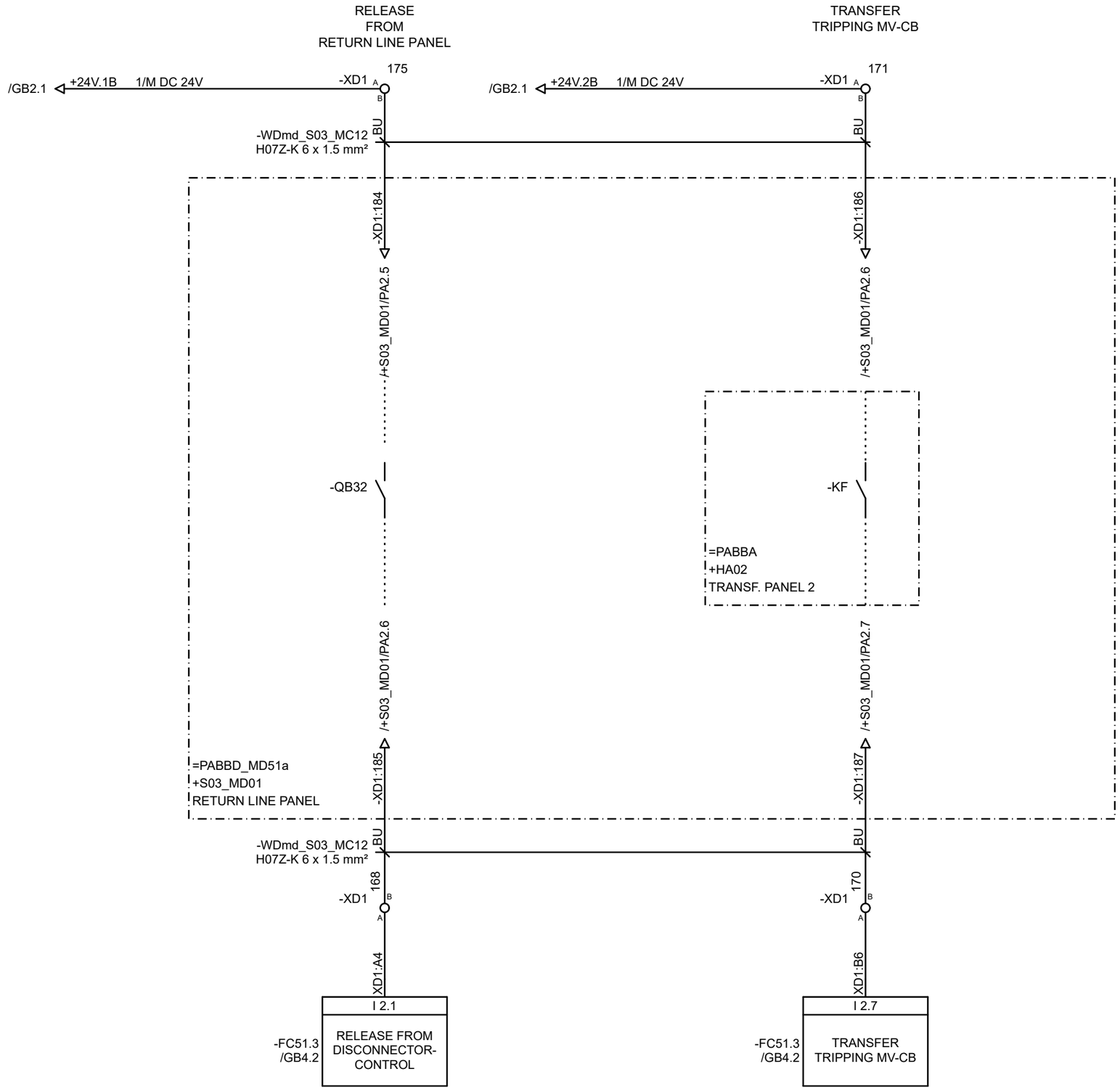

All unlabeled connections: H05Z-K, 0.5 mm², BU

01	AS MANUFACTURED	KP	JD	FD	25.08.20	Creat.	Saranyoot	26.02.20	ISTANBUL METRO LINE 11	SIEMENS	INCOMING PANEL 2		=PABBD_MC13b	&EFS000
						Check.	Jirawan	26.02.20	S03 Hasdal İstasyonu		INTERLOCK WITH MV-SWITCHGEAR CELL		+S03_MC12	S / PA1
						Appr.	Ferreira	26.02.20	DC SWG, SITRAS ® DSG, DC 1500V	Siemens Mobility GmbH	RETURN LINE PANEL	C.6633	EN	
Index	Remarks	Creat	Check	Appr	Date		Name	Date	Origin: /Replacement for: /Replaced by:	SMO RI EL COC TPS	CIRCUIT DIAGRAM	37302	SCL 1:1	A52811-E6914-S657-01 Page 1+ of 2

A3

This drawing was produced electronically and requires no signature.
It may not be amended manually.

Copyright © Siemens Mobility GmbH 2020 All Rights Reserved
When integrating this assembly into the plant the common rules for electrical and mechanical safety as well as the submitted documentation must be observed. Dissemination, reproduction of this drawing as well as utilization of its contents and communication thereof to others without express authorization are prohibited. Offenders will be held liable for payment of damages. All rights created by patent grant or registration of a utility model or design patent are reserved.

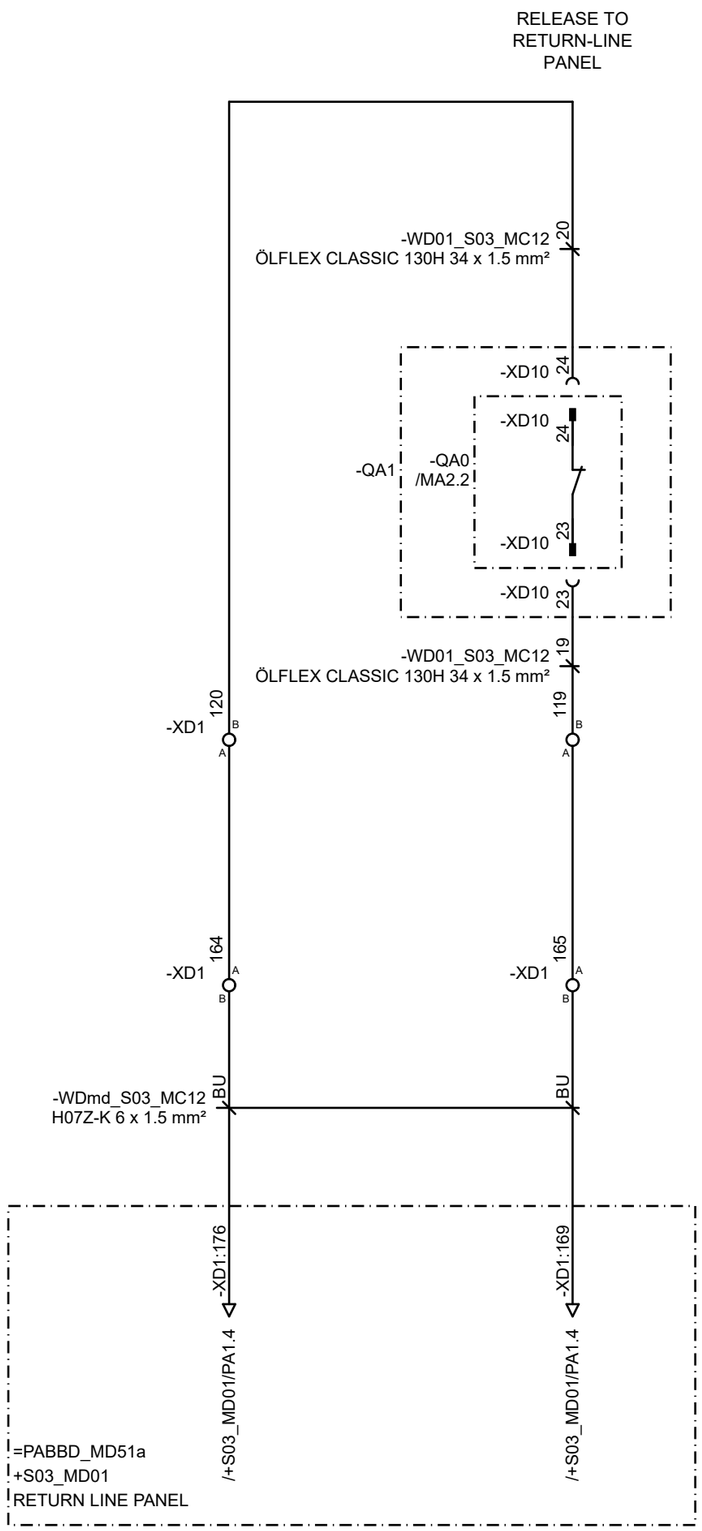

All unlabeled connections: H05Z-K, 0.5 mm², BU

01	AS MANUFACTURED	KP	JD	FD	25.08.20	Creat.	Saranyoot	26.02.20	ISTANBUL METRO LINE 11	SIEMENS	INCOMING PANEL 2		=PABBD_MC13b	&EFS000	
						Check.	Jirawan	26.02.20	S03 Hasdal İstasyonu		INTERLOCK WITH MV-SWITCHGEAR CELL		+S03_MC12	S / PA2	
						Appr.	Ferreira	26.02.20	DC SWG, SITRAS ® DSG, DC 1500V	Siemens Mobility GmbH	RETURN LINE PANEL	C.6633	EN		
Index	Remarks	Creat	Check	Appr	Date		Name	Date	Origin: /Replacement for: /Replaced by:	SMO RI EL COC TPS	CIRCUIT DIAGRAM	37302	SCL 1:1	A52811-E6914-S657-01	Page 2- of 2

A3

This drawing was produced electronically and requires no signature.
It may not be amended manually.

Copyright © Siemens Mobility GmbH 2020 All Rights Reserved
When integrating this assembly into the plant the common rules for electrical and mechanical safety as well as the submitted documentation must be observed. Dissemination, reproduction of this drawing as well as utilization of its contents and communication thereof to others without express authorization are prohibited. Offenders will be held liable for payment of damages. All rights created by patent grant or registration of a utility model or design patent are reserved.

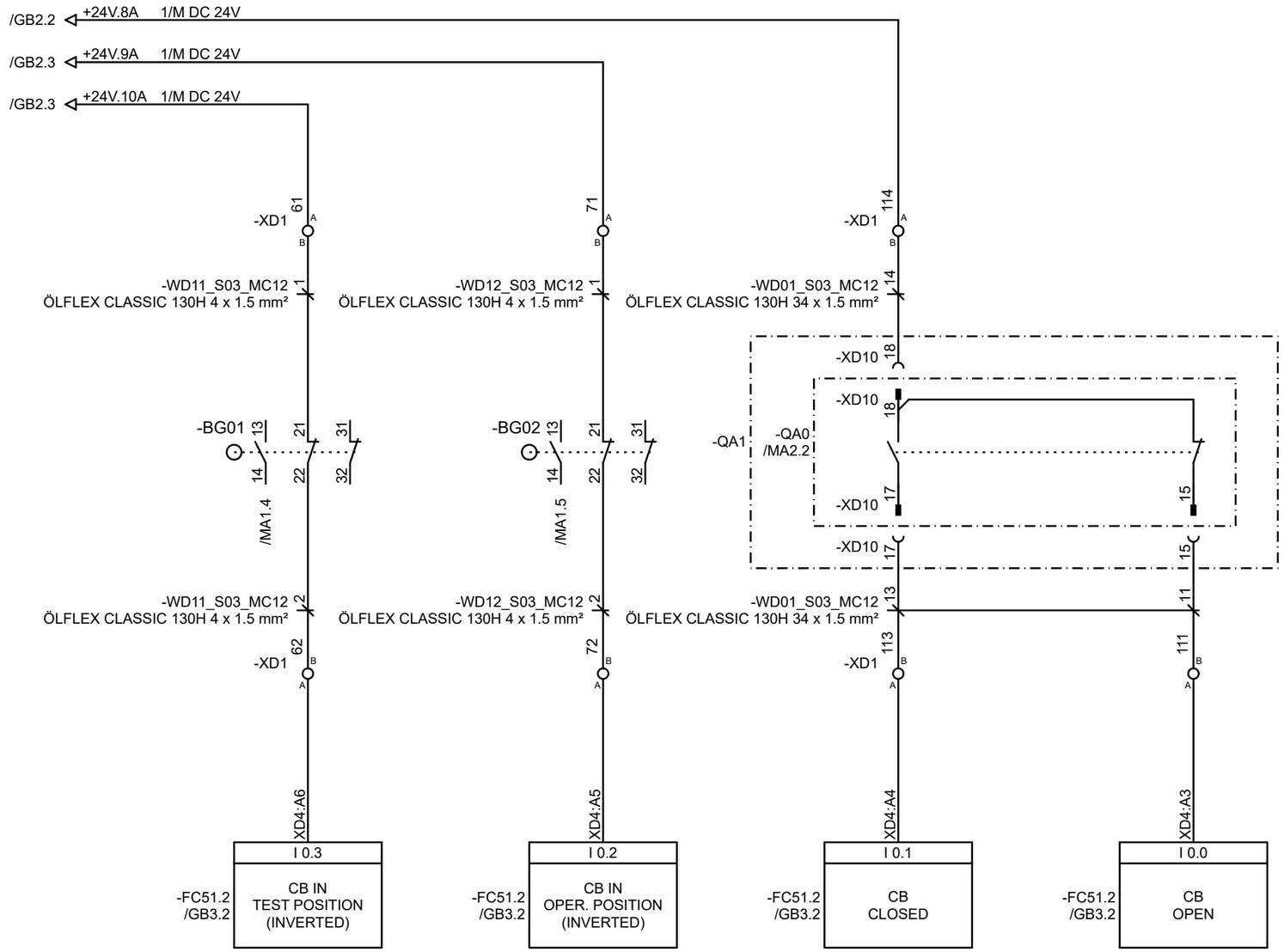

All unlabeled connections: H05Z-K, 0.5 mm², BU

01	AS MANUFACTURED	KP	JD	FD	25.08.20	Creat.	Saranyoot	26.02.20	ISTANBUL METRO LINE 11	SIEMENS	INCOMING PANEL 2		=PABBD_MC13b	&EFS000
						Check.	Jirawan	26.02.20	S03 Hasdal İstasyonu	Siemens Mobility GmbH	CHECK-BACK CIRCUIT CB		+S03_MC12	S / QA1
						Appr.	Ferreira	26.02.20	DC SWG, SITRAS ® DSG, DC 1500V	SMO RI EL COC TPS	CIRCUIT DIAGRAM	C.6633 / 37302	EN / SCL 1:1	A52811-E6914-S660-01 Page 1- of 1
Index	Remarks	Creat	Check	Appr	Date		Name	Date	Origin: /Replacement for: /Replaced by:					

A3

Copyright © Siemens Mobility GmbH 2020 All Rights Reserved
This drawing was produced electronically and requires no signature. It may not be amended manually.
When integrating this assembly into the plant the common rules for electrical and mechanical safety as well as the submitted documentation must be observed. Dissemination, reproduction of this drawing as well as utilization of its contents and communication thereof to others without express authorization are prohibited. Offenders will be held liable for payment of damages. All rights created by patent grant or registration of a utility model or design patent are reserved.

This drawing was produced electronically and requires no signature.
It may not be amended manually.

Copyright © Siemens Mobility GmbH 2020 All Rights Reserved
When integrating this assembly into the plant the common rules for electrical and mechanical safety as well as the submitted documentation must be observed. Dissemination, reproduction of this drawing as well as utilization of its contents and communication thereof to others without express authorization are prohibited. Offenders will be held liable for payment of damages. All rights created by patent grant or registration of a utility model or design patent are reserved.

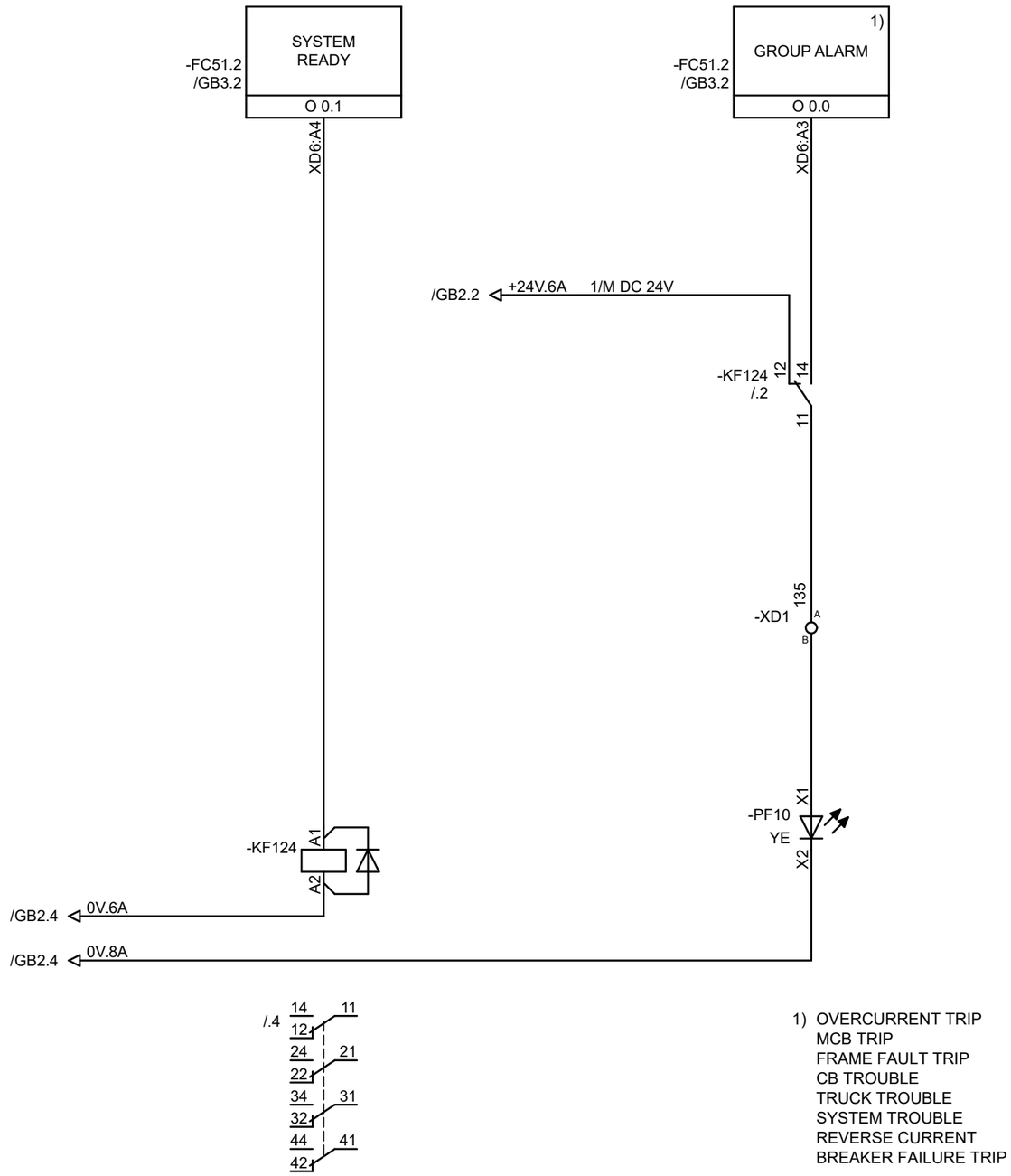

1) OVERCURRENT TRIP
MCB TRIP
FRAME FAULT TRIP
CB TROUBLE
TRUCK TROUBLE
SYSTEM TROUBLE
REVERSE CURRENT
BREAKER FAILURE TRIP

All unlabeled connections: H05Z-K, 0.5 mm², BU

01	AS MANUFACTURED	KP	JD	FD	25.08.20	Creat.	Saranyoot	26.02.20	ISTANBUL METRO LINE 11	SIEMENS	INCOMING PANEL 2		=PABBD_MC13b	&EFS000
						Check.	Jirawan	26.02.20	S03 Hasdal İstasyonu	Siemens Mobility GmbH	LOCAL INDICATIONS		+S03_MC12	S / RA1
						Appr.	Ferreira	26.02.20	DC SWG, SITRAS ® DSG, DC 1500V	SMO RI EL COC TPS	CIRCUIT DIAGRAM	C.6633 / 37302	EN / SCL 1:1	A52811-E6914-S666-01 / Page 1+ of 2
Index	Remarks	Creat	Check	Appr	Date		Name	Date	Origin: /Replacement for: /Replaced by:					

A3

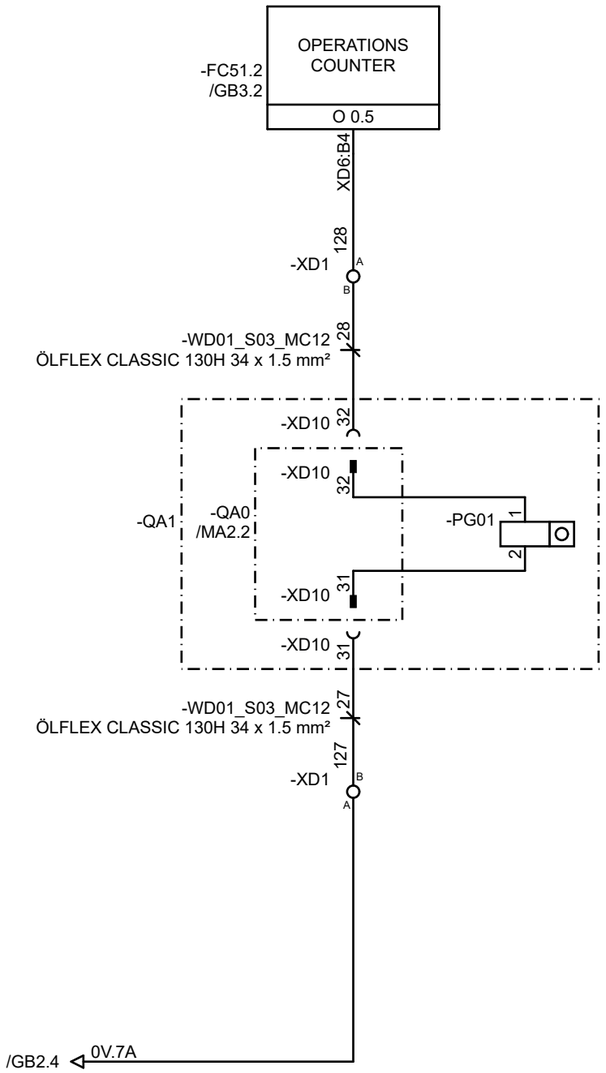

All unlabeled connections: H05Z-K, 0.5 mm², BU

01	AS MANUFACTURED	KP	JD	FD	25.08.20	Creat.	Saranyoot	26.02.20	ISTANBUL METRO LINE 11	SIEMENS	INCOMING PANEL 2			=PABBD_MC13b	&EFS000
						Check.	Jirawan	26.02.20	S03 Hasdal İstasyonu		OPERATION COUNTER			+S03_MC12	S / RA2
						Appr.	Ferreira	26.02.20	DC SWG, SITRAS ® DSG, DC 1500V	Siemens Mobility GmbH		C.6633	EN		
Index	Remarks	Creat	Check	Appr	Date		Name	Date	Origin: /Replacement for: /Replaced by:	SMO RI EL COC TPS	CIRCUIT DIAGRAM	37302	SCL 1:1	A52811-E6914-S666-01	Page 2- of 2

A3

This drawing was produced electronically and requires no signature.
It may not be amended manually.

Copyright © Siemens Mobility GmbH 2020 All Rights Reserved

When integrating this assembly into the plant the common rules for electrical and mechanical safety as well as the submitted documentation must be observed. Dissemination, reproduction of this drawing as well as utilization of its contents and communication thereof to others without express authorization are prohibited. Offenders will be held liable for payment of damages. All rights created by patent grant or registration of a utility model or design patent are reserved.

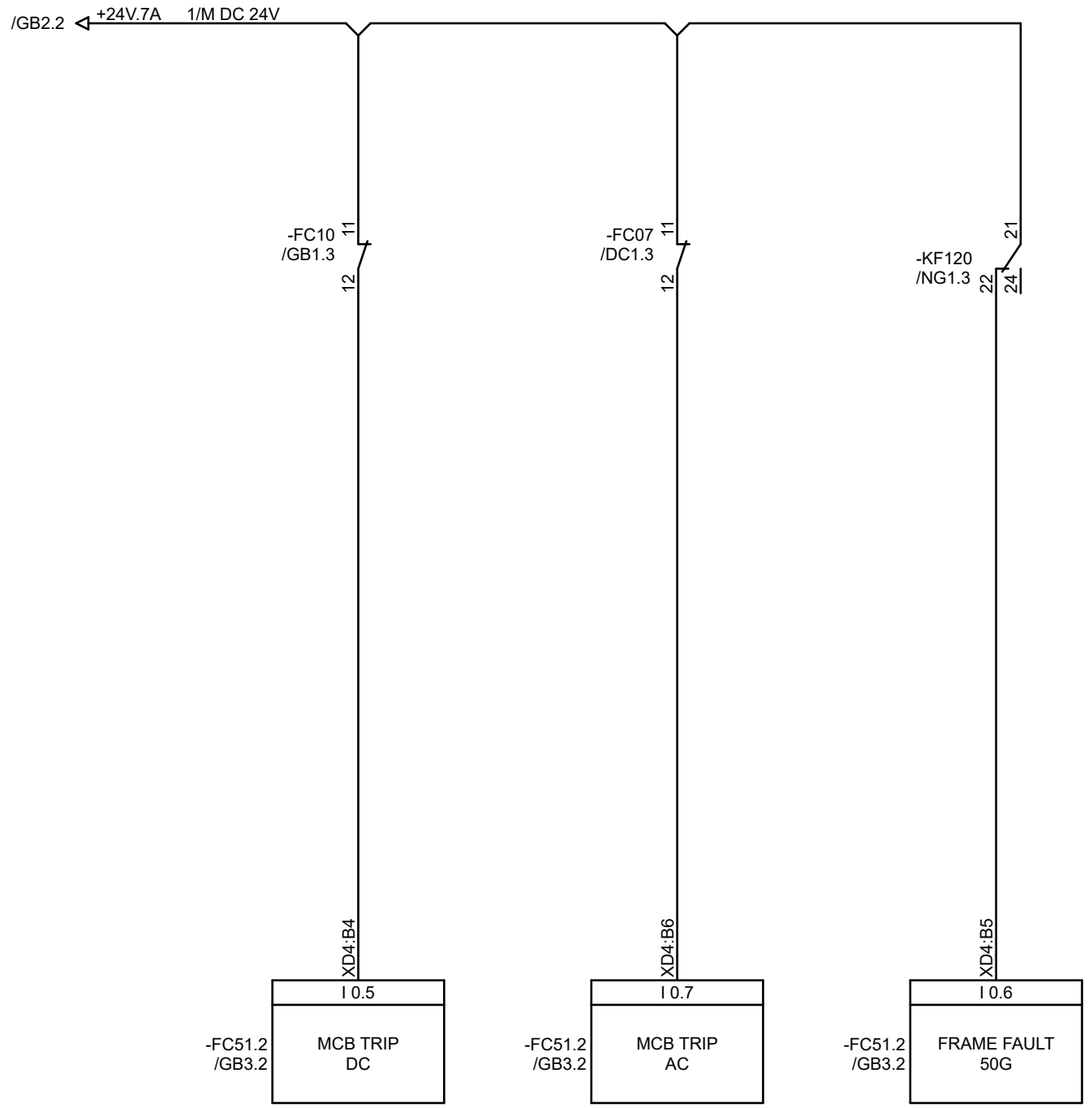

All unlabeled connections: H05Z-K, 0.5 mm², BU

01	AS MANUFACTURED	KP	JD	FD	25.08.20	Creat.	Saranyoot	26.02.20	ISTANBUL METRO LINE 11	SIEMENS	INCOMING PANEL 2		=PABBD_MC13b	&EFS000
						Check.	Jirawan	26.02.20	S03 Hasdal İstasyonu	Siemens Mobility GmbH	ALARMS		+S03_MC12	S / RB1
						Appr.	Ferreira	26.02.20	DC SWG, SITRAS ® DSG, DC 1500V	SMO RI EL COC TPS	CIRCUIT DIAGRAM	C.6633 / EN / 37302 / SCL 1:1	A52811-E6914-S667-01	Page 1+ of 4
Index	Remarks	Creat	Check	Appr	Date		Name	Date	Origin: /Replacement for: /Replaced by:					

A3

This drawing was produced electronically and requires no signature.
It may not be amended manually.

Copyright © Siemens Mobility GmbH 2020 All Rights Reserved
When integrating this assembly into the plant the common rules for electrical and mechanical safety as well as the submitted documentation must be observed. Dissemination, reproduction of this drawing as well as utilization of its contents and communication thereof to others without express authorization are prohibited. Offenders will be held liable for payment of damages. All rights created by patent grant or registration of a utility model or design patent are reserved.

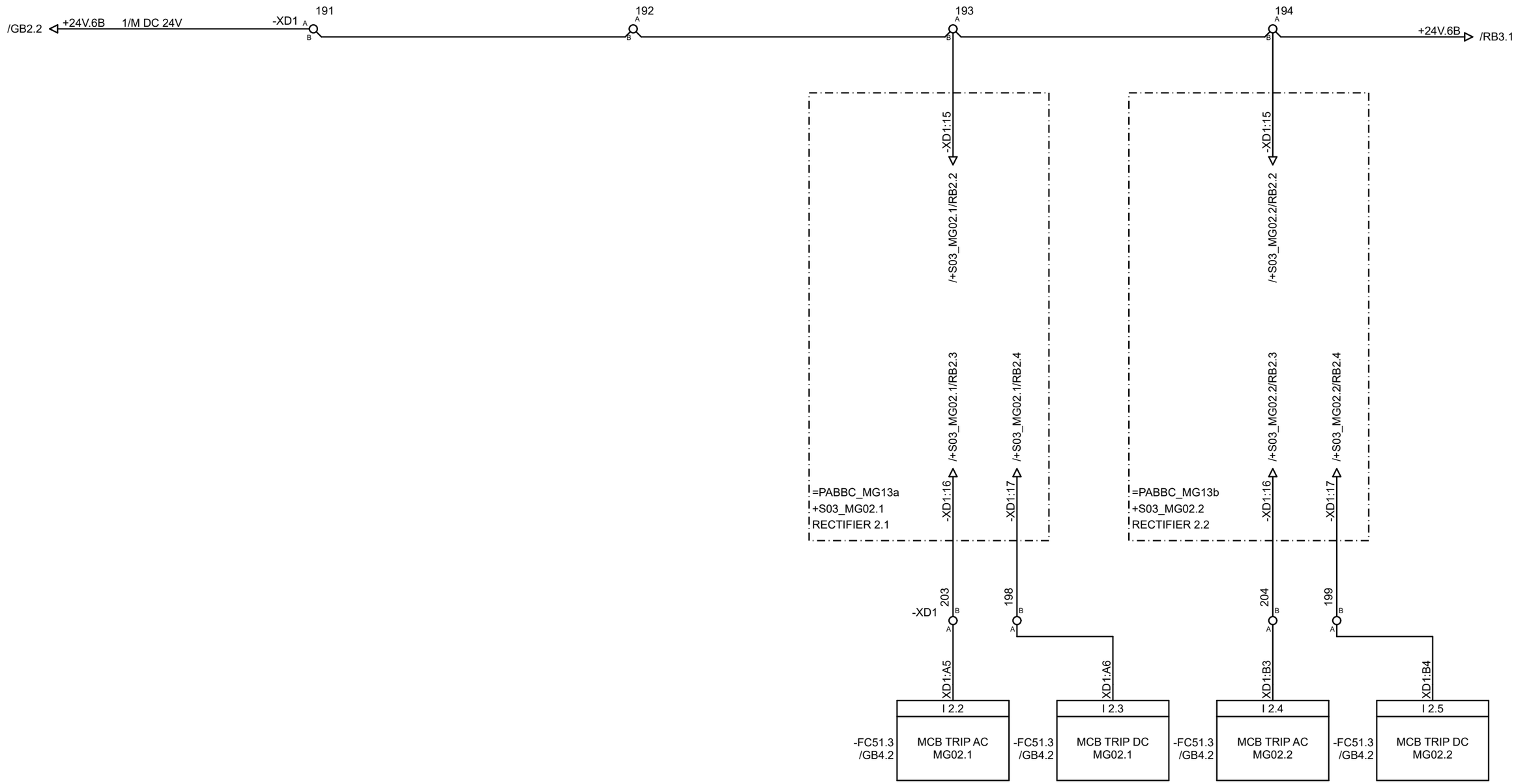

All unlabeled connections: H05Z-K, 0.5 mm², BU

01	AS MANUFACTURED	KP	JD	FD	25.08.20	Creat.	Saranyoot	26.02.20	ISTANBUL METRO LINE 11	SIEMENS	INCOMING PANEL 2		=PABBD_MC13b	&EFS000
						Check.	Jirawan	26.02.20	S03 Hasdal İstasyonu	Siemens Mobility GmbH	ALARMS		+S03_MC12	S / RB2
						Appr.	Ferreira	26.02.20	DC SWG, SITRAS ® DSG, DC 1500V	SMO RI EL COC TPS	RECTIFIER	C.6633 EN		
Index	Remarks	Creat	Check	Appr	Date		Name	Date	Origin: /Replacement for: /Replaced by:		CIRCUIT DIAGRAM	37302 SCL 1:1	A52811-E6914-S667-01	Page 2+ of 4

A3

This drawing was produced electronically and requires no signature.
It may not be amended manually.

Copyright © Siemens Mobility GmbH 2020 All Rights Reserved
When integrating this assembly into the plant the common rules for electrical and mechanical safety as well as the submitted documentation must be observed. Dissemination, reproduction of this drawing as well as utilization of its contents and communication thereof to others without express authorization are prohibited. Offenders will be held liable for payment of damages. All rights created by patent grant or registration of a utility model or design patent are reserved.

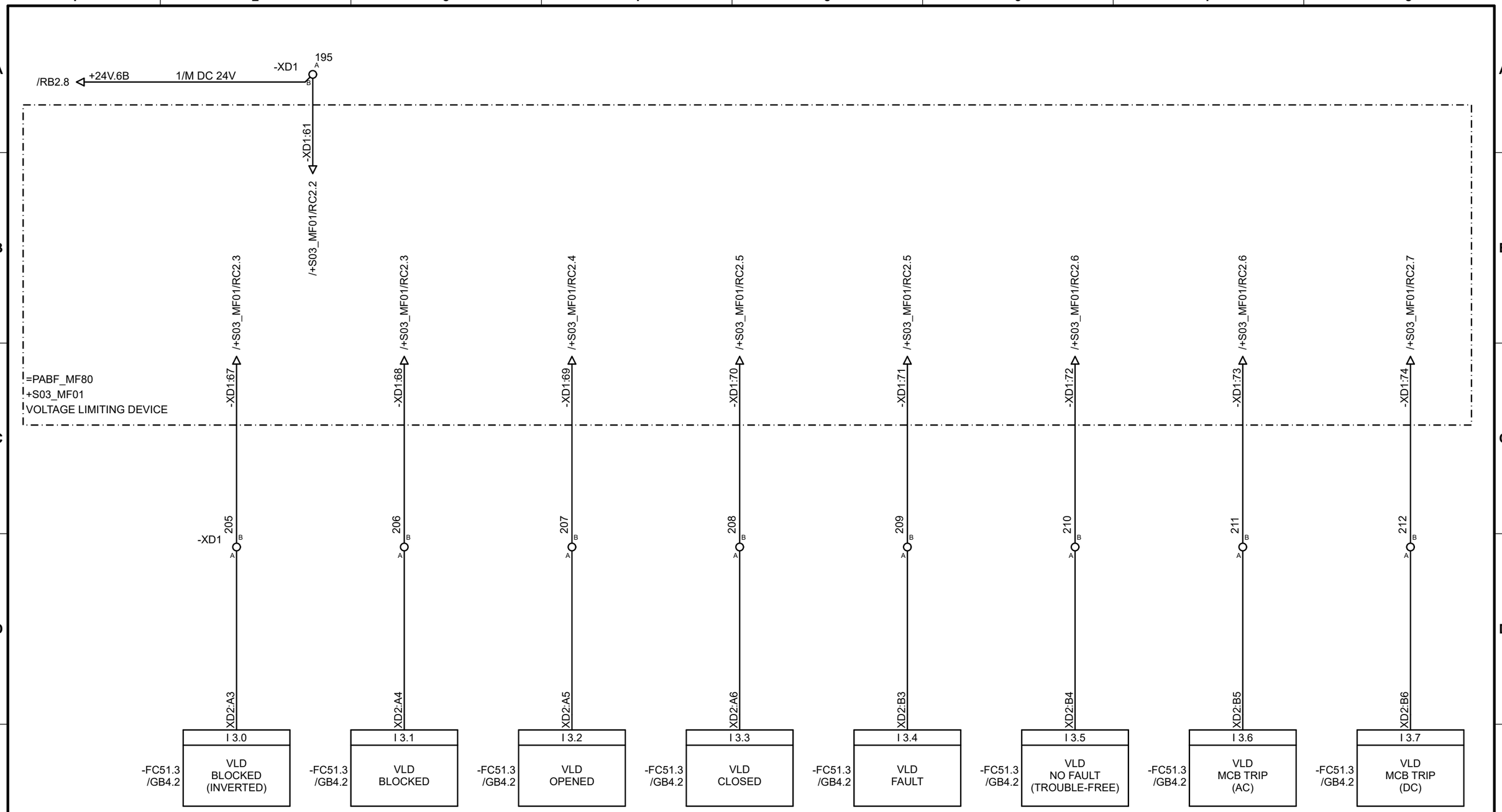

All unlabeled connections: H05Z-K, 0.5 mm², BU

01	AS MANUFACTURED	KP	JD	FD	25.08.20	Creat.	Saranyoot	26.02.20	ISTANBUL METRO LINE 11	SIEMENS	INCOMING PANEL 2			=PABBD_MC13b	&EFS000
						Check.	Jirawan	26.02.20	S03 Hasdal İstasyonu		ALARMS			+S03_MC12	S / RB3
						Appr.	Ferreira	26.02.20	DC SWG, SITRAS ® DSG, DC 1500V	Siemens Mobility GmbH	VOLTAGE LIMITING DEVICE PANEL	C.6633	EN		
Index	Remarks	Creat	Check	Appr	Date		Name	Date	Origin: /Replacement for: /Replaced by:	SMO RI EL COC TPS	CIRCUIT DIAGRAM	37302	SCL 1:1	A52811-E6914-S667-01	Page 3+ of 4

A3

This drawing was produced electronically and requires no signature.
It may not be amended manually.

Copyright © Siemens Mobility GmbH 2020 All Rights Reserved

When integrating this assembly into the plant the common rules for electrical and mechanical safety as well as the submitted documentation must be observed. Dissemination, reproduction of this drawing as well as utilization of its contents and communication thereof to others without express authorization are prohibited. Offenders will be held liable for payment of damages. All rights created by patent grant or registration of a utility model or design patent are reserved.

Copyright © Siemens Mobility GmbH 2020 All Rights Reserved
When integrating this assembly into the plant the common rules for electrical and mechanical safety as well as the submitted documentation must be observed. Dissemination, reproduction of this drawing as well as utilization of its contents and communication thereof to others without express authorization are prohibited. Offenders will be held liable for payment of damages. All rights created by patent grant or registration of a utility model or design patent are reserved.
This drawing was produced electronically and requires no signature. It may not be amended manually.

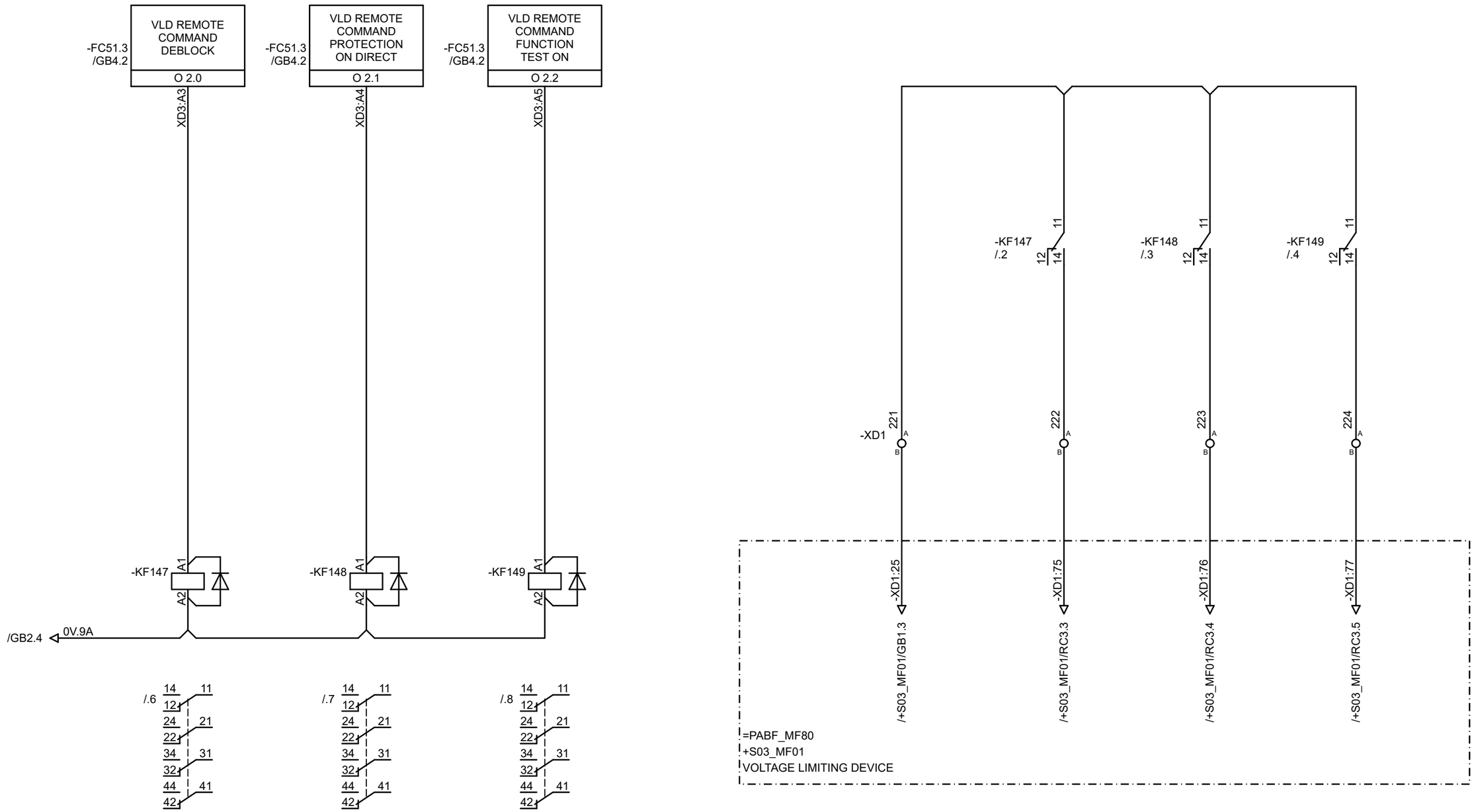

All unlabeled connections: H05Z-K, 0.5 mm², BU

01	AS MANUFACTURED	KP	JD	FD	25.08.20	Creat.	Saranyoot	26.02.20	ISTANBUL METRO LINE 11	SIEMENS	INCOMING PANEL 2	=PABBD_MC13b	&EFS000
						Check.	Jirawan	26.02.20	S03 Hasdal İstasyonu	Siemens Mobility GmbH	ALARMS	+S03_MC12	S / RB4
						Appr.	Ferreira	26.02.20	DC SWG, SITRAS ® DSG, DC 1500V	SMO RI EL COC TPS	CIRCUIT DIAGRAM	C.6633 EN	
Index	Remarks	Creat	Check	Appr	Date		Name	Date	Origin: /Replacement for: /Replaced by:			37302 SCL 1:1	A52811-E6914-S667-01 Page 4- of 4

A3

No.	Device	Reference
1	-BA1	/GA1.3
2	-BG01	/QA1.2
3	-BG02	/QA1.3
4	-BT01	/DC1.3
5	-EB01	/DC1.3
6	-FC2	/GA1.7
7	-FC07	/DC1.3
8	-FC10	/GB1.3
9	-FC11	/GB1.5
10	-FC51.1	/GB4.6
11	-FC51.2	/GB3.2
12	-FC51.3	/GB4.2
13	-KF02	/MA1.5
14	-KF05	/MA1.3
15	-KF120	/NG1.3
16	-KF124	/RA1.2
17	-KF129	/NF1.2
18	-KF130	/NF1.4
19	-KF147	/RB4.2
20	-KF148	/RB4.3
21	-KF149	/RB4.4
22	-PF10	/RA1.4
23	-PG11	/GA1.7
24	-PH51	/GB2.4
25	-QA1-PG01	/RA2.3
26	-QA1-QA0	/MA2.2
27	-RA10	/MA2.3
28	-RA23	/GA1.7
29	-TB51	/GB2.3
30	-TF11	/GA1.7
31	-TF20	/GA1.4

No.	Device	Reference

No.	Device	Reference

No.	Device	Reference

No.	Device	Reference

This drawing was produced electronically and requires no signature.
It may not be amended manually.

Copyright © Siemens Mobility GmbH 2020 All Rights Reserved
When integrating this assembly into the plant the common rules for electrical and mechanical safety as well as the submitted documentation must be observed. Dissemination, reproduction of this drawing as well as utilization of its contents and communication thereof to others without express authorization are prohibited. Offenders will be held liable for payment of damages. All rights created by patent grant or registration of a utility model or design patent are reserved.

Index	Remarks	Creat	Check	Appr	Date		Name	Date
01	AS MANUFACTURED	KP	JD	FD	25.08.20	Creat.	Saranyoot	26.02.20
						Check.	Jirawan	26.02.20
						Appr.	Ferreira	26.02.20

ISTANBUL METRO LINE 11
S03 Hasdal İstasyonu
DC SWG, SITRAS ® DSG, DC 1500V
Origin: /Replacement for: /Replaced by:

SIEMENS
Siemens Mobility GmbH
SMO RI EL COC TPS

INCOMING PANEL 2
EQUIPMENT DESIGNATION REF. LIST
PARTS LIST

=PABBD_MC13b &EPB000
+S03_MC12 T / YS1
C.6633 EN
37302 SCL 1:1 A52811-E6914-L692-01 Page 1- of 1

Qty Unit	Description Application	Product No. SAP-Material No.	Ref.No.	Function Unit Location	Equipm.-Ident.	Diagram Section No.	VAKZ	Rev. Date
4.00 PC	Fixed ball point, straight, 25mm ball, with formed non-cut internal thread M12	DSN:755200 A2V00000205293	0010	=PABBD_MC13b +S01_MC12			01	
1.00 PC	Measuring shunt, class: 0.2, measurement range: 8000A, voltage drop: 60mV, test voltage: 5kV, with round spring washer, version code: C2 connection surfaces silver plated	LLZ:B20608K00CS1C2M0 A2V00001249349	0020	=PABBD_MC13b +S01_MC12	-BA1		01	
2.00 PC	Actuator head for position switch 3SE5 Rounded plunger with 3mm overtravel Stainless steel plunger functional at -40° degrees	3SE5000-0AC02-1AJ0 A2V00001869159	0040	=PABBD_MC13b +S01_MC12	-BG01(Z), -BG02(Z)		01	
2.00 PC	Sirius position switch Plastic housing acc. to EN50047, 50mm Device connection 2x (M20x1.5) 1no/2nc Snap-action contacts Teflon plunger	3SE5242-0LC05 A2V00002081508	0030	=PABBD_MC13b +S01_MC12	-BG01, -BG02		01	
1.00 PC	Thermostat, switch-on temperature 0 up to +60C, contact 1NC	FDR:7T.91.0.000.2403 A2V00002035928	0050	=PABBD_MC13b +S01_MC12	-BT01		01	
1.00 PC	Heater protective insulation, 20W, 120 up to 240V AC/DC	FDR:7H.11.0.230.1020 A2V00001995581	0060	=PABBD_MC13b +S01_MC12	-EB01		01	
1.00	Circuit-breaker	5SY6206-6	0070	=PABBD_MC13b	-FC07		01	

Status **Date**	As manufactured TR_Istanbul Metro Line 11 - L1	**Date of pr** 26.11.2020 **Name** Jirawan D. **Siemens AG**	**Part list** C.6633 Istanbul Metro Line 11 DC Switchgear, Sitras DSG 1500V DC Incoming panel A2V00003027816	=PABBD_MC13b +S01_MC12 C.6633 A52811-E6904-L693-01	**Sheet** 1+ **Relea. Date.**

Qty Unit	Description Application	Product No. SAP-Material No.	Ref.No.	Function Unit Location	Equipm.-Ident.	Diagram Section No.	VAKZ	Rev. Date
PC	400V 6KA, 2-pole, B, 6A, D=70mm	A2V00001167929		+S01_MC12				
2.00 PC	auxiliary circuit switch mounting 2NC for circuit breaker d=70mm	5ST3012 A2V00001168800	0090	=PABBD_MC13b +S01_MC12	-FC07(Z), -FC10(Z)		01	
1.00 PC	Miniature circuit-breaker 400V 6kA, 2-pole, C, 6A, D=70mm	5SY6206-7 A2V00001167931	0080	=PABBD_MC13b +S01_MC12	-FC10		01	
1.00 PC	miniat. circuit-breaker 4 6kA, 2pole, C, 10A, d=70mm	5SY6210-7 A2V00001176089	0100	=PABBD_MC13b +S01_MC12	-FC11		01	
1.00 PC	Fuse base 2000V Type: SQ85300 / FERRAZ	FEZ:V098481 A2V00000209692	0110	=PABBD_MC13b +S01_MC12	-FC2		01	
1.00 PC	DC-Fuse, 1750V, 10A, Typ: CC 17,5 gRC 300 QF 0010	FEZ:M089435 A2V00001050108	0120	=PABBD_MC13b +S01_MC12	-FC2(Z)		01	
1.00 PC	SIMATIC S7-300 profile rail L=480mm	6ES7390-1AE80-0AA0 A2V00001757706	0130	=PABBD_MC13b +S01_MC12	-FC51		01	
1.00 PC	Sitras MDC HSC, High Speed Capacitor Tripping Unit, Output DC 200V/DC 300V	A5E36919323 A2V00002586352	0140	=PABBD_MC13b +S01_MC12	-FC51.1		01	
1.00 PC	Sitras MDC CPU, Central Processing Unit Modular Digital Controller and DC Protective Unit 8 DE, 8 DA, 4 Relay-A, 4 AE, 2 AA, 1 FOC Input, Ethernet Interfaces, USB-Interfaces, SD-Slot,	A5E36824386 A2V00002586354	0150	=PABBD_MC13b +S01_MC12	-FC51.2		01	

Qty Unit	Description Application	Product No. SAP-Material No.	Ref.No.	Function Unit Location	Equipm.-Ident.	Diagram Section No.	VAKZ	Rev. Date
	(CPU without optional functions)							
1.00 PC	Optional function,Sitras MDC FC, Standard protection functions incl. thermal overload protection and frequency supervision	MDC FC PROT A2V00002761124	0160	=PABBD_MC13b +S01_MC12	-FC51.2(Z)		01	
1.00 PC	Optional function,Sitras MDC FC, IEC 61850 communication	MDC FC 61850 A2V00002761323	0170	=PABBD_MC13b +S01_MC12	-FC51.2(Z)		01	
1.00 PC	Optional function,Sitras MDC FC, Control function incl. section residual resistance calculation incl. transfer trip function and bypass disconnector interlocking	MDC FC CTRL A2V00002761121	0180	=PABBD_MC13b +S01_MC12	-FC51.2(Z)		01	
1.00 PC	Sitras MDC IO, Input/Output Unit 16 DI,8 DO	A5E36946785 A2V00002586355	0190	=PABBD_MC13b +S01_MC12	-FC51.3		01	
2.00 PC	Surge supressor varistor with wiring spacer AC 48 to 127 V/DC 70 to 150 V for mounting to the coil terminal for contactor size 0 to 2	3TX7402-3H A2V00000213097	0210	=PABBD_MC13b +S01_MC12	-KF02(Z), -KF05(Z)		01	
2.00 PC	contactor, size 2, 2-pole DC-3 and 5, ratd. oper. curr. 32A	3TC4417-0AF4 A2V00000001393	0200	=PABBD_MC13b +S01_MC12	-KF02, -KF05		01	

Status **Date**	As manufactured TR_Istanbul Metro Line 11 - L1	**Date of pr** 26.11.2020 **Name** Jirawan D. **Siemens AG**	**Part list** C.6633 Istanbul Metro Line 11 DC Switchgear, Sitras DSG 1500V DC Incoming panel A2V00003027816	=PABBD_MC13b +S01_MC12 C.6633 A52811-E6904-L693-01	**Sheet** 3+ **Relea. Date.**

Qty Unit	Description Application	Product No. SAP-Material No.	Ref.No.	Function Unit Location	Equipm.- Ident.	Diagram Section No.	VAKZ	Rev. Date
	auxiliary contacts 22 (2NO+2NC) DC operation DC 110V							
4.00 PC	Socket for relay with 4CO contacts	FDR:94.84.2 A2V00001786801	0230	=PABBD_MC13b +S01_MC12	-KF120(Z),. -..130(Z)		01	
4.00 PC	Clip for Plug-in relays, series 55 with socket 94.84.2	FDR:094.91.3 A2V00001120261	0240	=PABBD_MC13b +S01_MC12	-KF120(Z),. -..130(Z)		01	
3.00 PC	LED display with resistor	FDR:99.80.0.024.98 A2V00001023849	0250	=PABBD_MC13b +S01_MC12	-KF120(Z),. -..130(Z)		01	
3.00 PC	Plug-in relay, 4CO contacts, 24V DC, 7A	FDR:55.34.9.024.0040 A2V00001023848	0220	=PABBD_MC13b +S01_MC12	-KF120,... -KF130		01	
1.00 PC	Plug-in relay, 4CO contacts, 24V DC, 7A, with freewheeling diode/LED	FDR:55.34.9.024.0090 A2V00001159102	0260	=PABBD_MC13b +S01_MC12	-KF124		01	
3.00 PC	Plug-in relay, 4CO contacts, 24V DC, 7A, with freewheeling diode/LED	FDR:55.34.9.024.0090 A2V00001159102	0510	=PABBD_MC13b +S01_MC12	-KF147 -KF149		01	
3.00 PC	Socket for relay with 4CO contacts	FDR:94.84.2 A2V00001786801	0490	=PABBD_MC13b +S01_MC12	-KF147(Z) -KF149(Z)		01	
3.00 PC	Clip for Plug-in relays, series 55 with socket 94.84.2	FDR:094.91.3 A2V00001120261	0500	=PABBD_MC13b +S01_MC12	-KF147(Z) -KF149(Z)		01	
1.00 PC	Indicator Light, 22mm,round, plastic,	3SU1001-6AA70-0AA0 A2V00002718004	0270	=PABBD_MC13b +S01_MC12	-PF10		01	

Qty Unit	Description Application	Product No. SAP-Material No.	Ref.No.	Function Unit Location	Equipm.-Ident.	Diagram Section No.	VAKZ	Rev. Date
	clear, smooth Lens							
1.00 PC	Holder for 3 modules, plastic	3SU1500-0AA10-0AA0 A2V00002556115	0280	=PABBD_MC13b +S01_MC12	-PF10(Z)		01	
1.00 PC	LED module with integrated LED, 24-240V AC/DC, yellow, screw terminal, for front plate mounting	3SU1401-1BH30-1AA0 A2V00002618304	0290	=PABBD_MC13b +S01_MC12	-PF10(Z)		01	
1.00 PC	Moving coil instrument for DC, class 1.5,96x96mm, for transducer, connection: +/-10V, instrument range: "A", measuring range: 0 up to 10V, test voltage: 3kV #M = 0...10V #A = 0...2000V	LLZ:MA19NA606X0000008 A2V00002825036	0300	=PABBD_MC13b +S01_MC12	-PG11		01	
1.00 PC	Sitras MDC HMI, Operator Panel Sitras MDC 7 Zoll Color-Touch-Screen, 8 LEDs Input DC 24V Ethernet Interface, USB-Interface	A2V00002586528 A2V00002586528	0310	=PABBD_MC13b +S01_MC12	-PH51		01	

Qty Unit	Description Application	Product No. SAP-Material No.	Ref.No.	Function Unit Location	Equipm.-Ident.	Diagram Section No.	VAKZ	Rev. Date
1.00 PC	Summator 24V DC, 6 digits, latch fastener, without reset, 25Imp/s, gray	KUE:1.169.200.033 A2V00001100756	0320	=PABBD_MC13b +S01_MC12	-QA1-PG01		01	
1.00 PC	High speed DC circuit breaker, 6000A, rated voltage max. DC 2000V, arc chute: 82, execution: S #UR6082S1EE1LO84D00000SL0 #electric holding DC 110 V, #instantaneous overcurrent release L: #scale of setting 13.0 - 18.0 kA, #setting value: 18 000 A, #varistor on coil UR60, 110VDC, #with indirect release (BIM 7) #with aux. contacts 2C0+3NO+2NC #with Harting plug #plug assignment to SG104063R00082	CHJ:UR60-82S A2V00002534702	0330	=PABBD_MC13b +S01_MC12	-QA1-QA0		01	
1.00 PC	Capacitor release coil and mechanical manual emergency tripping, Type BIM7, for UR60/80	CHJ:R605 A2V00002329810	0340	=PABBD_MC13b +S01_MC12	-QA1-QA0(Z)		01	
1.00 PC	Varistor for GS-circuit breaker UR26/36/40/46/60/80 from Company Secheron	CHJ:R020 A2V00002332902	0350	=PABBD_MC13b +S01_MC12	-QA1-QA0(Z)		01	
1.00	Wirewound resistor 200W,	XDA:GRF20/267S56R	0370	=PABBD_MC13b	-RA10		01	

Qty Unit	Description Application	Product No. SAP-Material No.	Ref.No.	Function Unit Location	Equipm.-Ident.	Diagram Section No.	VAKZ	Rev. Date
PC	56 Ohm +/- 10%	A2V00002454360		+S01_MC12				
1 SET	Fixed parts set R701, for resistance GR..20	XDA:R701 A2V00001100626	0380	=PABBD_MC13b +S01_MC12	-RA10(Z)		01	
1.00 PC	Sitras DPU96 VD voltage divider, inputs: 1000-2000-4000V, output: 10V	E10433-E9511-H100 A2V00000209567	0390	=PABBD_MC13b +S01_MC12	-RA23		01	
1.00 PC	Sitras MDC PS,Power Supply Unit, Input DC 24V - 240V,AC 110V - 240V, Output DC 24V	A5E36919127 A2V00002586350	0400	=PABBD_MC13b +S01_MC12	-TB51		01	
1.00 PC	DC-transducer type VariTrans, input: 0 up to 10V, output: 0 up to 10V, option 336: auxiliary voltage, AC/DC 24V, test voltage 3,25kV	KCK:B13038F1-OPT.336 A2V00001089816	0410	=PABBD_MC13b +S01_MC12	-TF11		01	
1.00 PC	Buffer amplifier Sitras PRO BA operating voltage: 24VDC rated voltage: 600-3000VDC 1 fiber optical output 3 analog output	A5E00739501 A2V00001368112	0420	=PABBD_MC13b +S01_MC12	-TF20		01	
1.00 PC	Control cable,set halogen free,34x1,5mm, with plug MHO 16 L25 By-pack kit: 1 clamping screw M25 Drawing-No: 123-01605_V04	FKZ:123-01605 A2V00002427918	0430	=PABBD_MC13b +S01_MC12	-WD01		01	

Status **Date**	As manufactured TR_Istanbul Metro Line 11 - L1	**Date of pr** 26.11.2020 **Name** Jirawan D. **Siemens AG**	**Part list** C.6633 Istanbul Metro Line 11 DC Switchgear, Sitras DSG 1500V DC Incoming panel A2V00003027816	=PABBD_MC13b +S01_MC12 C.6633 A52811-E6904-L693-01	**Sheet** 7+ **Relea. Date.**

Qty Unit	Description Application	Product No. SAP-Material No.	Ref.No.	Function Unit Location	Equipm.-Ident.	Diagram Section No.	VAKZ	Rev. Date
1.00 PC	Patch cable RJ45 IP 20, RJ45 IP 20, Cat.6A/ Class EA(ISO/IEC 11801 2010), LSZH, 2m assembled IE-cable, Patch cable CabinetLine, Cat.6, LSZH, green, halogen free	WDM:1251590020 A2V00002450764	0450	=PABBD_MC13b +S01_MC12	-WG12		01	
1.00 PC	Fiber optic cable with FSMA/F-ST plug for connection between Sitras MDC CPU and Sitras PRO BA, length: 3.5m, outside diameter: 6mm Plastic simplex single mode fiber optic cable with one fiber	A5E43262831 A2V00002727435	0460	=PABBD_MC13b +S01_MC12	-WH51		01	
4.00 PC	Contact plate for disconnecting system, fixed part, length 50mm, rated current DC 4300A	BEW:HAK4300-G50 A2V00001115835	0480	=PABBD_MC13b +S01_MC12	-XD01(Z), -XD02(Z)		01	
4.00 PC	Finger contact for disconnecting system, mobile part, length 40mm, screw tappings at front side, rated current DC 4200A	BEW:HAK4200-F40G A2V00001278258	0470	=PABBD_MC13b +S01_MC12	-XD01, -XD02		01	

Status **Date**	As manufactured TR_Istanbul Metro Line 11 - L1	**Date of pr** 26.11.2020 **Name** Jirawan D. **Siemens AG**	**Part list** C.6633 Istanbul Metro Line 11 DC Switchgear, Sitras DSG 1500V DC Incoming panel A2V00003027816	=PABBD_MC13b +S01_MC12 C.6633 A52811-E6904-L693-01	**Sheet** 8- **Relea. Date.**

Copyright © Siemens Mobility GmbH 2020 All Rights Reserved
This drawing was produced electronically and requires no signature.
It may not be amended manually.
When integrating this assembly into the plant the common rules for electrical and mechanical safety as well as the submitted documentation must be observed. Dissemination, reproduction of this drawing as well as utilization of its contents and communication thereof to others without express authorization are prohibited. Offenders will be held liable for payment of damages. All rights created by patent grant or registration of a utility model or design patent are reserved.

Item_ID	Rev State	Rev	Name	State
C_000009424	B	001	C6633_+MC13 rdjt	

FRONTVIEW

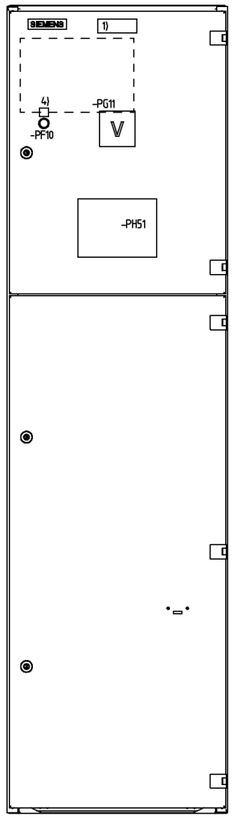

FRONTVIEW
(WITHOUT COVERS, LV COMPARTMENT AND TRUCK)

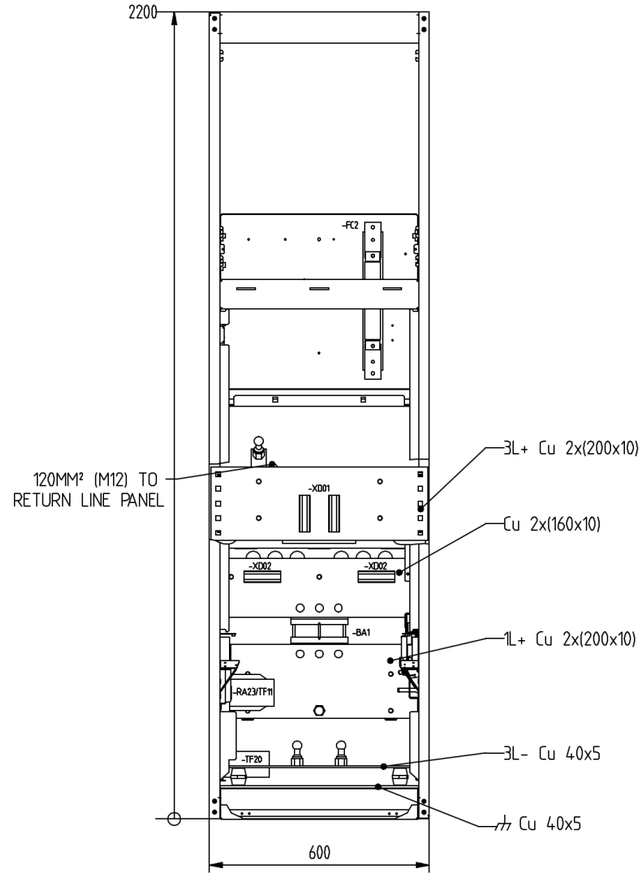

FRONTVIEW
(LV COMPARTMENT_MC13b)

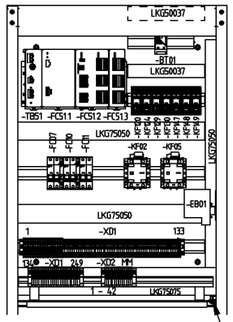

INSTALL PRESSURE SCREW
TYPE MDZT-M25-15
FOR STRAIN RELIEF

ALL NON-MARKED CABLES 240MM² (M12)
CABLE LUGS NOT IN THE SCOPE
OF THE DC-SWITCHGEAR

EARTHING STUD
(SIDE VIEW)

1) 2) ..SEE STATION BOOK

NOTE:
THIS DRAWING IS FOR +MC11 TSS T01-T10
THIS DRAWING IS FOR +MC12 TSS S01-S09

Index	Remarks	Creat	Check	Appr	Date		Name	Date
01	AS MANUFACTURED	KP	JD	FD	25.08.20	Creat.	Saranyoot	26.02.20
						Check.	Jirawan	26.02.20
						Appr.	Ferreira	26.02.20

ISTANBUL METRO LINE 11
S03 Hasdal İstasyonu
DC SWG, SITRAS ® DSG, DC 1500V
Origin: /Replacement for: /Replaced by:

SIEMENS
Siemens Mobility GmbH
SMO RI EL COC TPS

INCOMING PANEL 2
FRONT VIEW
ARRANGEMENT DRAWING

=PABBD_MC13b &ELU000
+S03_MC12 U / YU1
C.6633 EN
37302 SCL 1:1 A52811-E6914-V694-01 Page 1+ of 5

A3

This drawing was produced electronically and requires no signature.
It may not be amended manually.

Copyright © Siemens Mobility GmbH 2020 All Rights Reserved
When integrating this assembly into the plant the common rules for electrical and mechanical safety as well as the submitted documentation must be observed. Dissemination, reproduction of this drawing as well as utilization of its contents and communication thereof to others without express authorization are prohibited. Offenders will be held liable for payment of damages. All rights created by patent grant or registration of a utility model or design patent are reserved.

SECTION VIEW

A-A

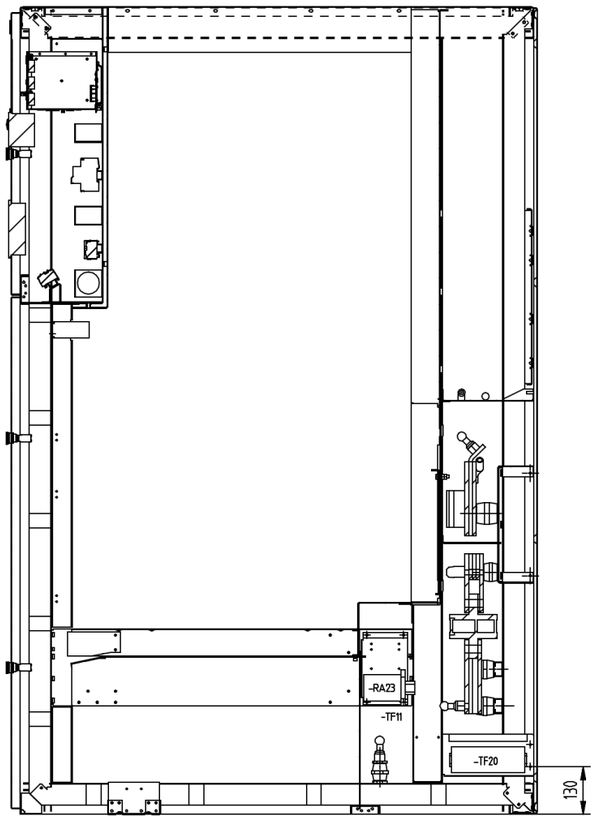

B-B

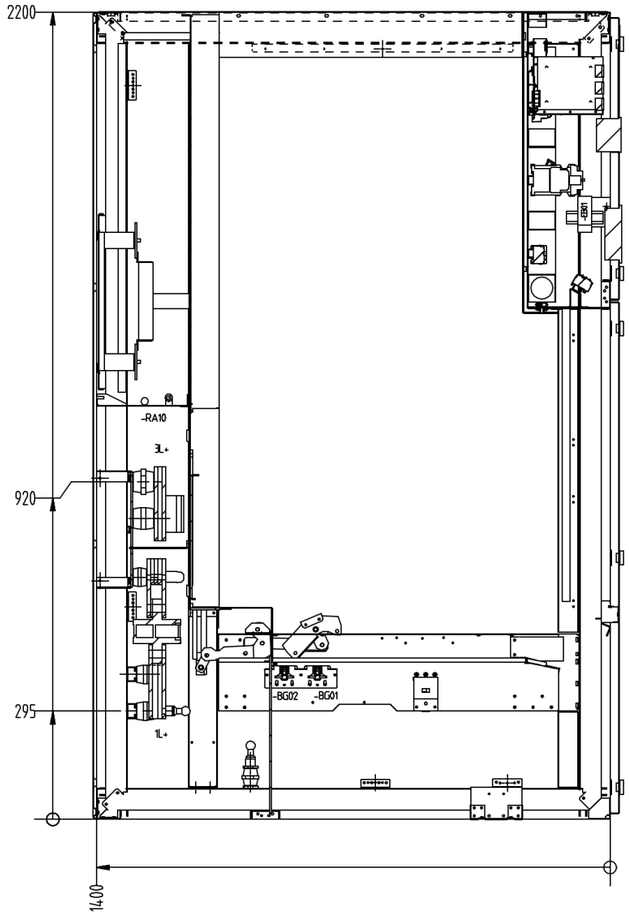

Index	Remarks	Creat	Check	Appr	Date		Name	Date	Origin: /Replacement for: /Replaced by:
01	AS MANUFACTURED	KP	JD	FD	25.08.20	Creat.	Saranyoot	26.02.20	ISTANBUL METRO LINE 11
						Check.	Jirawan	26.02.20	S03 Hasdal İstasyonu
						Appr.	Ferreira	26.02.20	DC SWG, SITRAS ® DSG, DC 1500V

SIEMENS
Siemens Mobility GmbH
SMO RI EL COC TPS

INCOMING PANEL 2
SECTION A - A
ARRANGEMENT DRAWING

=PABBD_MC13b &ELU000
+S03_MC12 U / YU2
C.6633 EN
37302 SCL 1:1 A52811-E6914-V694-01 Page 2+ of 5

A3

This drawing was produced electronically and requires no signature.
It may not be amended manually.

Copyright © Siemens Mobility GmbH 2020 All Rights Reserved
When integrating this assembly into the plant the common rules for electrical and mechanical safety as well as the submitted documentation must be observed. Dissemination, reproduction of this drawing as well as utilization of its contents and communication thereof to others without express authorization are prohibited. Offenders will be held liable for payment of damages. All rights created by patent grant or registration of a utility model or design patent are reserved.

TRUCK VIEW

SIDE VIEW - RIGHT

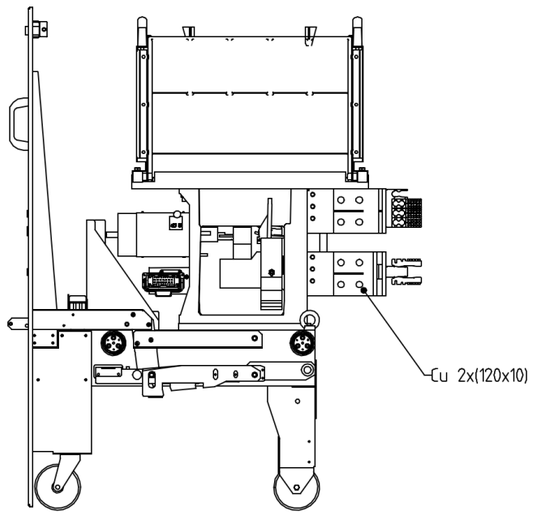

FRONT VIEW

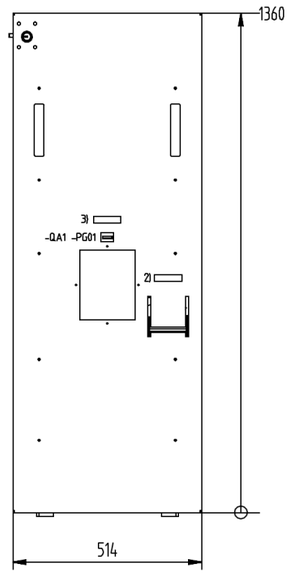

SIDE VIEW - LEFT

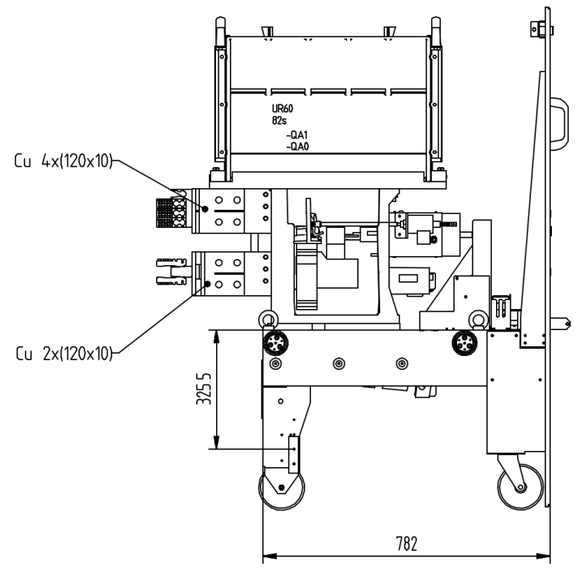

BACK VIEW

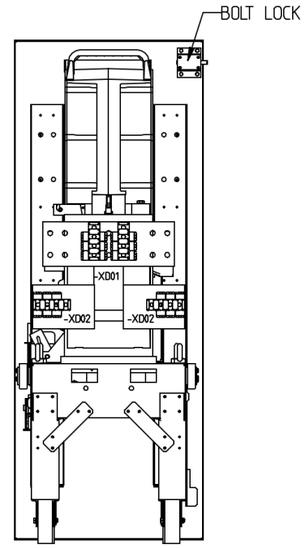

3) 4) SEE STATION BOOK

01	AS MANUFACTURED	KP	JD	FD	25.08.20	Creat.	Saranyoot	26.02.20	ISTANBUL METRO LINE 11	SIEMENS	INCOMING PANEL 2			=PABBD_MC13b	&ELU000
						Check.	Jirawan	26.02.20	S03 Hasdal İstasyonu	Siemens Mobility GmbH	TRUCK VIEW			+S03_MC12	U / YU3
						Appr.	Ferreira	26.02.20	DC SWG, SITRAS ® DSG, DC 1500V			C.6633	EN		
Index	Remarks	Creat	Check	Appr	Date		Name	Date	Origin: /Replacement for: /Replaced by:	SMO RI EL COC TPS	ARRANGEMENT DRAWING	37302	SCL 1:1	A52811-E6914-V694-01	Page 3+ of 5

A3

This drawing was produced electronically and requires no signature.
It may not be amended manually.

Copyright © Siemens Mobility GmbH 2020 All Rights Reserved
When integrating this assembly into the plant the common rules for electrical and mechanical safety as well as the submitted documentation must be observed. Dissemination, reproduction of this drawing as well as utilization of its contents and communication thereof to others without express authorization are prohibited. Offenders will be held liable for payment of damages. All rights created by patent grant or registration of a utility model or design patent are reserved.

Z
12

CONTACT PLATES
TOP

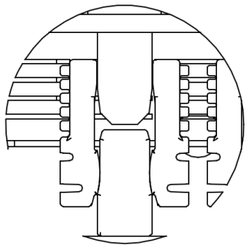

MOVING CONTACT
TOP

Y
12

CONTACT PLATES
BOTTOM

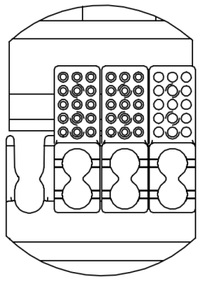

MOVING CONTACT
BOTTOM

TOP VIEW

MAIN CONTACT BUSBAR (-XD01)

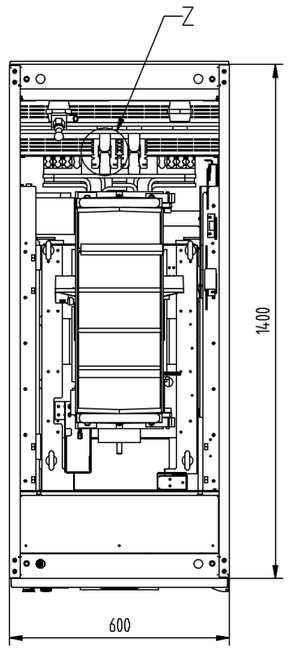

MAIN CONTACT CABLE CONNECTION (-XD02)

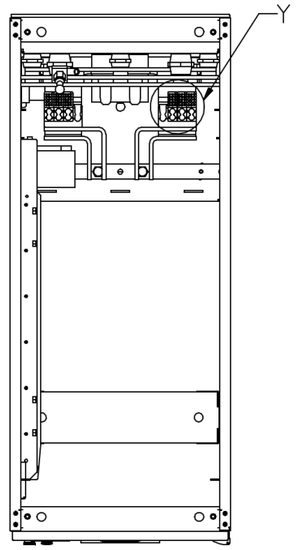

01	AS MANUFACTURED	KP	JD	FD	25.08.20	Creat.	Saranyoot	26.02.20	ISTANBUL METRO LINE 11	SIEMENS	INCOMING PANEL 2			=PABBD_MC13b	&ELU000
						Check.	Jirawan	26.02.20	S03 Hasdal İstasyonu		TRUCK TOP VIEW			+S03_MC12	U / YU4
						Appr.	Ferreira	26.02.20	DC SWG, SITRAS ® DSG, DC 1500V	Siemens Mobility GmbH		C.6633	EN		
Index	Remarks	Creat	Check	Appr	Date		Name	Date	Origin: /Replacement for: /Replaced by:	SMO RI EL COC TPS	ARRANGEMENT DRAWING	37302	SCL 1:1	A52811-E6914-V694-01	Page 4+ of 5

A3

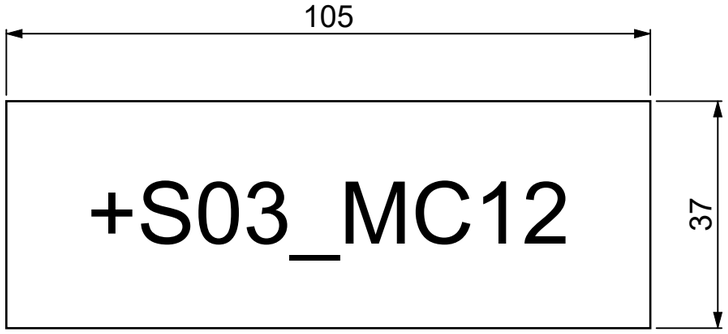

LABEL NO. 1
LAMINATED PLASTIC 105x37,
WHITE SURFACE
WITH BLACK LETTERS
LETTER HEIGHT 10mm
MAX. 11 TYPES
LABEL PASTED

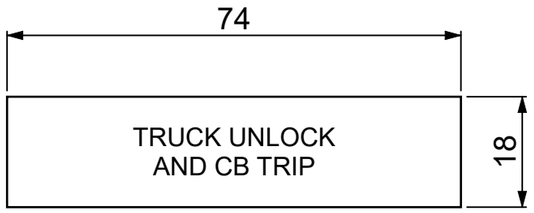

LABEL NO. 2
LAMINATED PLASTIC 74x18,
WHITE SURFACE
WITH BLACK LETTERS
LETTER HEIGHT 3mm
LABEL PASTED

LABEL NO. 3
LAMINATED PLASTIC 74x18,
WHITE SURFACE
WITH BLACK LETTERS
LETTER HEIGHT 3mm
LABEL PASTED

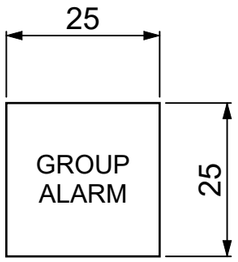

LABEL NO. 4: -PF10 (Z)
LAMINATED PLASTIC 25x25,
WHITE SURFACE
WITH BLACK LETTERS
LETTER HEIGHT 3mm
LABEL PASTED

Index	Remarks	Creat	Check	Appr	Date		Name	Date	Origin: /Replacement for: /Replaced by:
01	AS MANUFACTURED	KP	JD	FD	25.08.20	Creat.	Saranyoot	26.02.20	ISTANBUL METRO LINE 11
						Check.	Jirawan	26.02.20	S03 Hasdal İstasyonu
						Appr.	Ferreira	26.02.20	DC SWG, SITRAS ® DSG, DC 1500V

SIEMENS
Siemens Mobility GmbH
SMO RI EL COC TPS

INCOMING PANEL 2
LABELS
ARRANGEMENT DRAWING

=PABBD_MC13b &ELU000
+S03_MC12 U / YU5
C.6633 EN
37302 SCL 1:1 A52811-E6914-V694-01 Page 5- of 5

A3

This drawing was produced electronically and requires no signature.
It may not be amended manually.

Copyright © Siemens Mobility GmbH 2020 All Rights Reserved
When integrating this assembly into the plant the common rules for electrical and mechanical safety as well as the submitted documentation must be observed. Dissemination, reproduction of this drawing as well as utilization of its contents and communication thereof to others without express authorization are prohibited. Offenders will be held liable for payment of damages. All rights created by patent grant or registration of a utility model or design patent are reserved.

Legend:

Terminals Quantity: 120

Accessories		Bridges		Connection Input-Output		
	Separator		Ridge bridge	Bridge	Z-Diode	Plug
	Block separator		Switch bridge	NC contact	Resistor	Gate valve
	Head cover		Comb bridge	NO contact	Fuse1	
	Test socket			Diode	Fuse2	

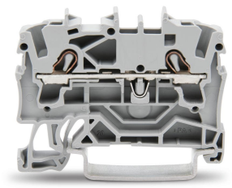

Terminal	Terminal Type	Quantity
1-12,17-20,191-199,201-212,221-224,244-249	WAGO 2004-1201	47
21-40,61-64,71-74,101-132,134-135,143-146,164-165,168,170-171,175	WAGO 2002-1201	72
133	WAGO 2002-1208	1

Connection information	1	2	3	4	Wire color	LEFT SIDE Terminal Destination	4	3	2	1	Terminal strip -XD1 Symbol			Name	1	2	3	4	CIRCUIT DIAGRAM	RIGHT SIDE Terminal Destination	Wire color	=PABBD_MC23+S03_MC24-DC LOOP 200_S03_MC24, H07Z-K 2 x 4 mm² 1	-DC LOOP 200_S03_MC12, H07Z-K 2 x 4 mm² 2	=PABBD_MC23+S03_MC24-DC LOOP 300_S03_MC24, H07Z-K 2 x 4 mm² 3	-DC LOOP 300_S03_MC12, H07Z-K 2 x 4 mm² 4	=PABBD_MC23+S03_MC24-DC LOOP 100_S03_MC24, H07Z-K 2 x 4 mm² 5	-DC LOOP 100_S03_MC12, H07Z-K 2 x 4 mm² 6	=PABBD_MC23+S03_MC24-DC LOOP 120_S03_MC24, H07Z-K 2 x 4 mm² 7	-DC LOOP 120_S03_MC12, H07Z-K 2 x 4 mm² 8	Connection information
H07Z-K/1.5 mm²/BK						-FC10 :2					A		B	1					/GB1.3	=PABBD_MC23 +S03_MC24 -XD1 :2B	BK	X								
							X				A		B	2					/GB1.4	=PABBD_MD51a +S03_MD01 -XD1 :1B	BK		X							
H07Z-K/1.5 mm²/BK						-FC10 :4					A		B	3					/GB1.3	=PABBD_MC23 +S03_MC24 -XD1 :4B	BK	X								
							X				A		B	4					/GB1.4	=PABBD_MD51a +S03_MD01 -XD1 :3B	BK		X							
											A		B	5					/GB1.3	=PABBD_MC23 +S03_MC24 -XD1 :6B	BK			X						
H07Z-K/1.5 mm²/BK						-FC11 :2	X				A		B	6					/GB1.5	=PABBC_MG13a +S03_MG02.1 -XD3 :1B	BK				X					
											A		B	7					/GB1.3	=PABBD_MC23 +S03_MC24 -XD1 :8B	BK			X						
H07Z-K/1.5 mm²/BK						-FC11 :4	X				A		B	8					/GB1.5	=PABBC_MG13a +S03_MG02.1 -XD3 :3B	BK				X					
											A		B	9					/GB1.3	=PABBD_MC23 +S03_MC24 -XD1 :10B	BU					X				
							X				A		B	10					/GB1.5	=PABBD_MD51a +S03_MD01 -XD1 :9B	BU						X			
											A		B	11					/GB1.3	=PABBD_MC23 +S03_MC24 -XD1 :12B	BU					X				
							X				A		B	12					/GB1.6	=PABBD_MD51a +S03_MD01 -XD1 :11B	BU						X			
H05Z-K/0.5 mm²/BU						-KF120 :A1					A		B	17					/NG1.3	=PABBD_MC23 +S03_MC24 -XD1 :18B	BU							X		
							X				A		B	18					/NG1.4	=PABBD_MD51a +S03_MD01 -XD1 :17B	BU								X	
H05Z-K/0.5 mm²/BU						-KF120 :A2					A		B	19					/NG1.4	=PABBD_MC23 +S03_MC24 -XD1 :20B	BU							X		
							X				A		B	20					/NG1.5	=PABBD_MD51a +S03_MD01 -XD1 :18B	BU								X	
H05Z-K/0.5 mm²/BU						-TB51 :XD3:1					A		B	21					/GB2.1	-XD1 :175A										H05Z-K/0.5 mm²/BU
H05Z-K/0.5 mm²/BU						-TF11 :7					A		B	22					/GB2.1	-XD1 :171A										H05Z-K/0.5 mm²/BU
H05Z-K/0.5 mm²/BU						-FC51.2 :XD4:A1					A		B	23					/GB2.2											
H05Z-K/0.5 mm²/BU						-FC51.3 :XD1:A1					A		B	24					/GB2.2											
H05Z-K/0.5 mm²/BU						-KF130 :11					A		B	25					/GB2.2											
H05Z-K/0.5 mm²/BU						-KF124 :12					A		B	26					/GB2.2	-XD1 :191A										H05Z-K/0.5 mm²/BU
H05Z-K/0.5 mm²/BU						-FC10 :11					A		B	27					/GB2.2											
H05Z-K/0.5 mm²/BU						-XD1 :114A					A		B	28					/GB2.2											
H05Z-K/0.5 mm²/BU						-XD1 :71A					A		B	29					/GB2.3											
H05Z-K/0.5 mm²/BU						-XD1 :61A					A		B	30					/GB2.3											
H05Z-K/0.5 mm²/BU						-TB51 :XD3:3	X				A		B	31					/GB2.3											
H05Z-K/0.5 mm²/BU						-TF11 :8					A		B	32					/GB2.3											
H05Z-K/0.5 mm²/BU						-FC51.2 :XD4:B1					A		B	33					/GB2.3											
H05Z-K/0.5 mm²/BU						-FC51.3 :XD1:B1					A		B	34					/GB2.4											
H05Z-K/0.5 mm²/BU						-KF129 :A2					A		B	35					/GB2.4											
H05Z-K/0.5 mm²/BU						-KF124 :A2					A		B	36					/GB2.4											
H05Z-K/0.5 mm²/BU						-XD1 :127A					A		B	37					/GB2.4											
H05Z-K/0.5 mm²/BU						-PF10 :X2					A		B	38					/GB2.4											

Index	Remarks	Creat	Check	Appr	Date		Name	Date	Origin: /Replacement for: /Replaced by:
01	AS MANUFACTURED	KP	JD	FD	25.08.20	Creat.	Saranyoot	26.02.20	ISTANBUL METRO LINE 11
						Check.	Jirawan	26.02.20	S03 Hasdal İstasyonu
						Appr.	Ferreira	26.02.20	DC SWG, SITRAS ® DSG, DC 1500V

SIEMENS
Siemens Mobility GmbH
SMO RI EL COC TPS

INCOMING PANEL 2
TERMINALS/PLUGS
-XD1
TERMINAL CONNECTION TABLE

=PABBD_MC13b &EMA000
+S03_MC12 V / YV1
C.6633 EN
37302 SCL 1:1 A52811-E6914-S695-01 Page 1+ of 5

This drawing was produced electronically and requires no signature. It may not be amended manually.

Copyright © Siemens Mobility GmbH 2020 All Rights Reserved

When integrating this assembly into the plant the common rules for electrical and mechanical safety as well as the submitted documentation must be observed. Dissemination, reproduction of this drawing as well as utilization of its contents and communication thereof to others without express authorization are prohibited. Offenders will be held liable for payment of damages. All rights created by patent grant or registration of a utility model or design patent are reserved.

This drawing was produced electronically and requires no signature.
It may not be amended manually.

Copyright © Siemens Mobility GmbH 2020 All Rights Reserved
When integrating this assembly into the plant the common rules for electrical and mechanical safety as well as the submitted documentation must be observed. Dissemination, reproduction of this drawing as well as utilization of its contents and communication thereof to others without express authorization are prohibited. Offenders will be held liable for payment of damages. All rights created by patent grant or registration of a utility model or design patent are reserved.

Legend:

Terminals Quantity: 120

Accessories	Bridges	Connection Input-Output
Separator	Ridge bridge	Bridge, Z-Diode, Plug
Block separator	Switch bridge	NC contact, Resistor, Gate valve
Head cover	Comb bridge	NO contact, Fuse1
Test socket		Diode, Fuse2

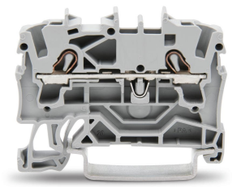

Terminal	Terminal Type	Quantity
1-12,17-20,191-199,201-212,221-224,244-249	WAGO 2004-1201	47
21-40,61-64,71-74,101-132,134-135,143-146,164-165,168,170-171,175	WAGO 2002-1201	72
133	WAGO 2002-1208	1

Connection information	1	2	3	4	Wire color	LEFT SIDE Terminal Destination	4	3	2	1	Symbol			Name	1	2	3	4	CIRCUIT DIAGRAM	RIGHT SIDE Terminal Destination	Wire color	1 (-WD11_S03_MC12, ÖLFLEX CLASSIC 130H 4 x 1.5 mm²)	2 (-WD12_S03_MC12, ÖLFLEX CLASSIC 130H 4 x 1.5 mm²)	3 (-WD01_S03_MC12, ÖLFLEX CLASSIC 130H 34 x 1.5 mm²)	4	5	6	7	8	Connection information
							Terminal strip -XD1																							
H05Z-K/0.5 mm²/BU						-KF147 :A2					A			B	39				/GB2.4											
											A			B	40				/GB2.4	-MM :MMB										H07Z-K/1.5 mm²/BK
H05Z-K/0.5 mm²/BU						-XD1 :30A	X				A			B	61				/QA1.2	-BG01 :21	1	X								
H05Z-K/0.5 mm²/BU						-FC51.2 :XD4:A6					A			B	62				/QA1.2	-BG01 :22	2	X								
H07Z-K/1.5 mm²/BK						-KF05 :14					A			B	63				/MA1.4	-BG01 :13	3	X								
H07Z-K/1.5 mm²/BK						-KF120 :11					A			B	64				/MA1.4	-BG01 :14	4	X								
H05Z-K/0.5 mm²/BU						-XD1 :29A					A			B	71				/QA1.3	-BG02 :21	1		X							
H05Z-K/0.5 mm²/BU						-FC51.2 :XD4:A5					A			B	72				/QA1.3	-BG02 :22	2		X							
H07Z-K/1.5 mm²/BK						-KF02 :14					A			B	73				/MA1.5	-BG02 :13	3		X							
H07Z-K/1.5 mm²/BK						-KF120 :11					A			B	74				/MA1.5	-BG02 :14	4		X							
H07Z-K/1.5 mm²/BK						-FC10 :3					A			B	101				/MA2.2	-QA1-XD10 :1	1			X						
H07Z-K/1.5 mm²/BK						-KF05 :2					A			B	102				/MA2.2	-QA1-XD10 :2	2			X						
H07Z-K/1.5 mm²/BK						-FC51.1 :XD2:1					A			B	103				/GB4.8	-QA1-XD10 :3	3			X						
H07Z-K/1.5 mm²/BK						-FC51.1 :XD2:2					A			B	104				/GB4.8	-QA1-XD10 :4	4			X						
											A			B	105				/MA2.6	-QA1-XD10 :5	5			X						
											A			B	106				/MA2.6	-QA1-XD10 :6	6			X						
											A			B	107				/MA2.4	-QA1-XD10 :11	7			X						
											A			B	108				/MA2.4	-QA1-XD10 :12	8			X						
											A			B	109				/MA2.3	-QA1-XD10 :13	9			X						
											A			B	110				/MA2.3	-QA1-XD10 :14	10			X						
H05Z-K/0.5 mm²/BU						-FC51.2 :XD4:A3					A			B	111				/QA1.6	-QA1-XD10 :15	11			X						
											A			B	112				/MA2.7	-QA1-XD10 :16	12			X						
H05Z-K/0.5 mm²/BU						-FC51.2 :XD4:A4					A			B	113				/QA1.4	-QA1-XD10 :17	13			X						
H05Z-K/0.5 mm²/BU						-XD1 :28A					A			B	114				/QA1.4	-QA1-XD10 :18	14			X						
											A			B	115				/MA2.5	-QA1-XD10 :19	15			X						
											A			B	116				/MA2.7	-QA1-XD10 :20	16			X						
											A			B	117				/MA2.5	-QA1-XD10 :21	17			X						
											A			B	118				/MA2.5	-QA1-XD10 :22	18			X						
H05Z-K/0.5 mm²/BU						-XD1 :165A					A			B	119				/PA2.4	-QA1-XD10 :23	19			X						
H05Z-K/0.5 mm²/BU						-XD1 :164A					A			B	120				/PA2.3	-QA1-XD10 :24	20			X						
											A			B	121				/MA2.5	-QA1-XD10 :25	21			X						
											A			B	122				/MA2.5	-QA1-XD10 :26	22			X						
											A			B	123				/MA2.7	-QA1-XD10 :27	23			X						
											A			B	124				/MA2.7	-QA1-XD10 :28	24			X						

Index	Remarks	Creat	Check	Appr	Date		Name	Date	Origin: /Replacement for: /Replaced by:
01	AS MANUFACTURED	KP	JD	FD	25.08.20	Creat.	Saranyoot	26.02.20	ISTANBUL METRO LINE 11
						Check.	Jirawan	26.02.20	S03 Hasdal İstasyonu
						Appr.	Ferreira	26.02.20	DC SWG, SITRAS ® DSG, DC 1500V

SIEMENS
Siemens Mobility GmbH
SMO RI EL COC TPS

INCOMING PANEL 2
TERMINALS/PLUGS
-XD1
TERMINAL CONNECTION TABLE

=PABBD_MC13b &EMA000
+S03_MC12 V / YV2
C.6633 EN
37302 SCL 1:1 A52811-E6914-S695-01 Page 2+ of 5

Legend:

Terminals Quantity: 120

Accessories		Bridges		Connection Input-Output		
Separator		Ridge bridge		Bridge	Z-Diode	Plug
Block separator		Switch bridge		NC contact	Resistor	Gate valve
Head cover		Comb bridge		NO contact	Fuse1	
Test socket				Diode	Fuse2	

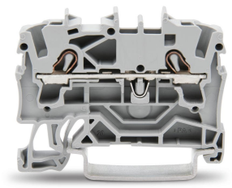

Terminal	Terminal Type	Quantity
1-12,17-20,191-199,201-212,221-224,244-249	WAGO 2004-1201	47
21-40,61-64,71-74,101-132,134-135,143-146,164-165,168,170-171,175	WAGO 2002-1201	72
133	WAGO 2002-1208	1

Connection information	1	2	3	4	Wire color	LEFT SIDE Terminal Destination	4	3	2	1	Symbol			Name	1	2	3	4	CIRCUIT DIAGRAM	RIGHT SIDE Terminal Destination	Wire color	-WD01_S03_MC12, ÖLFLEX CLASSIC 130H 34 x 1.5 mm² 1	-WDmd_S03_MC12, H07Z-K 6 x 1.5 mm² 2	=PABBC_MG13a+S03_MG02.1-WDmg02.1_MC12, H07Z-K 3 x 1.5 mm² 3	=PABBC_MG13b+S03_MG02.2-WDmg02.2_MC12, H07Z-K 3 x 1.5 mm² 4	=PABF_MF80+S03_MF01-WDmf01_MC12, 13 x 1.5 mm² 5	6	7	8	Connection information
											A		B	125					/MA2.5	-QA1-XD10 :29	25	X							
											A		B	126					/MA2.5	-QA1-XD10 :30	26	X							
H05Z-K/0.5 mm²/BU						-XD1 :37A					A		B	127					/RA2.2	-QA1-XD10 :31	27	X							
H05Z-K/0.5 mm²/BU						-FC51.2 :XD6:B4					A		B	128					/RA2.2	-QA1-XD10 :32	28	X							
											A		B	129					/MA2.7	-QA1-XD10 :33	29	X							
											A		B	130					/MA2.7	-QA1-XD10 :34	30	X							
											A		B	131					/MA2.8	-QA1-XD10 :35	31	X							
											A		B	132					/MA2.8	-QA1-XD10 :36	32	X							
											A		B	133					/MA2.6	-QA1-XD10 :MM	33	X							
											A		B	134					/MA2.8	-QA1-XD10 :-	GNYE	X							
H05Z-K/0.5 mm²/BU						-KF124 :11					A		B	135					/RA1.4	-PF10 :X1									H05Z-K/0.5 mm²/BU
H07Z-K/1.5 mm²/BK						-TF11 :5					A		B	143					/GA1.7	-PG11 :+									H07Z-K/1.5 mm²/BK
											A		B	144					/GA1.7	-FC51.2 :XD1:A3									H07Z-K/1.5 mm²/BK
											A		B	145					/GA1.8	-FC51.2 :XD1:A1									H07Z-K/1.5 mm²/GY
H07Z-K/1.5 mm²/GY						-TF11 :6					A		B	146					/GA1.8	-PG11 :-									H07Z-K/1.5 mm²/GY
H05Z-K/0.5 mm²/BU						-XD1 :120A					A		B	164					/PA2.3	=PABBD_MD51a +S03_MD01 -XD1 :176B	BU		X						
H05Z-K/0.5 mm²/BU						-XD1 :119A					A		B	165					/PA2.4	=PABBD_MD51a +S03_MD01 -XD1 :169B	BU		X						
H05Z-K/0.5 mm²/BU						-FC51.3 :XD1:A4					A		B	168					/PA1.3	=PABBD_MD51a +S03_MD01 -XD1 :185B	BU		X						
H05Z-K/0.5 mm²/BU						-FC51.3 :XD1:B6					A		B	170					/PA1.5	=PABBD_MD51a +S03_MD01 -XD1 :187B	BU		X						
H05Z-K/0.5 mm²/BU						-XD1 :22B					A		B	171					/PA1.5	=PABBD_MD51a +S03_MD01 -XD1 :186B	BU		X						
H05Z-K/0.5 mm²/BU						-XD1 :21B					A		B	175					/PA1.3	=PABBD_MD51a +S03_MD01 -XD1 :184B	BU		X						
H05Z-K/0.5 mm²/BU						-XD1 :26B					A		B	191					/RB2.2										
											A		B	192					/RB2.4										
											A		B	193					/RB2.6	=PABBC_MG13a +S03_MG02.1 -XD1 :15B	BU			X					
											A		B	194					/RB2.7	=PABBC_MG13b +S03_MG02.2 -XD1 :15B	BU				X				
											A		B	195					/RB3.2	=PABF_MF80 +S03_MF01 -XD1 :61B	1					X			
											A		B	196					-										
											A		B	197					-										
H05Z-K/0.5 mm²/BU						-FC51.3 :XD1:A6					A		B	198					/RB2.6	=PABBC_MG13a +S03_MG02.1 -XD1 :17B	BU			X					
H05Z-K/0.5 mm²/BU						-FC51.3 :XD1:B4					A		B	199					/RB2.8	=PABBC_MG13b +S03_MG02.2 -XD1 :17B	BU				X				
											A		B	201					-										
											A		B	202					-										
H05Z-K/0.5 mm²/BU						-FC51.3 :XD1:A5					A		B	203					/RB2.6	=PABBC_MG13a +S03_MG02.1 -XD1 :16B	BU			X					
H05Z-K/0.5 mm²/BU						-FC51.3 :XD1:B3					A		B	204					/RB2.7	=PABBC_MG13b +S03_MG02.2 -XD1 :16B	BU				X				

Terminal strip: -XD1

Index	Remarks	Creat	Check	Appr	Date		Name	Date
01	AS MANUFACTURED	KP	JD	FD	25.08.20	Creat.	Saranyoot	26.02.20
						Check.	Jirawan	26.02.20
						Appr.	Ferreira	26.02.20

ISTANBUL METRO LINE 11
S03 Hasdal İstasyonu
DC SWG, SITRAS ® DSG, DC 1500V
Origin: /Replacement for: /Replaced by:

SIEMENS
Siemens Mobility GmbH
SMO RI EL COC TPS

INCOMING PANEL 2
TERMINALS/PLUGS
-XD1
TERMINAL CONNECTION TABLE

=PABBD_MC13b &EMA000
+S03_MC12 V / YV3
C.6633 EN
37302 SCL 1:1 A52811-E6914-S695-01 Page 3+ of 5

This drawing was produced electronically and requires no signature. It may not be amended manually.

Copyright © Siemens Mobility GmbH 2020 All Rights Reserved

When integrating this assembly into the plant the common rules for electrical and mechanical safety as well as the submitted documentation must be observed. Dissemination, reproduction of this drawing as well as utilization of its contents and communication thereof to others without express authorization are prohibited. Offenders will be held liable for payment of damages. All rights created by patent grant or registration of a utility model or design patent are reserved.

This drawing was produced electronically and requires no signature.
It may not be amended manually.

Copyright © Siemens Mobility GmbH 2020 All Rights Reserved
When integrating this assembly into the plant the common rules for electrical and mechanical safety as well as the submitted documentation must be observed. Dissemination, reproduction of this drawing as well as utilization of its contents and communication thereof to others without express authorization are prohibited. Offenders will be held liable for payment of damages. All rights created by patent grant or registration of a utility model or design patent are reserved.

Legend:

Terminals Quantity: 120

Accessories		Bridges		Connection Input-Output		
Separator		Ridge bridge		Bridge	Z-Diode	Plug
Block separator		Switch bridge		NC contact	Resistor	Gate valve
Head cover		Comb bridge		NO contact	Fuse1	
Test socket				Diode	Fuse2	

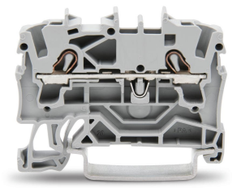

Terminal	Terminal Type	Quantity
1-12,17-20,191-199,201-212,221-224,244-249	WAGO 2004-1201	47
21-40,61-64,71-74,101-132,134-135,143-146,164-165,168,170-171,175	WAGO 2002-1201	72
133	WAGO 2002-1208	1

Connection information	1	2	3	4	Wire color	LEFT SIDE Terminal Destination	4	3	2	1	Terminal strip -XD1 Symbol			Name	1	2	3	4	CIRCUIT DIAGRAM	RIGHT SIDE Terminal Destination	Wire color	1 =PABF_MF80+S03_MF01-WDmf01_MC12, 13 x 1.5 mm²	2 =PABBD_MC23+S03_MC24-DC LOOP 130_S03_MC24, H07Z-K 3 x 4 mm²	3 -DC LOOP 130_S03_MC12, H07Z-K 3 x 4 mm²	4	5	6	7	8	Connection information
H05Z-K/0.5 mm²/BU						-FC51.3 :XD2:A3					A	○	○ B	205					/RB3.2	=PABF_MF80 +S03_MF01 -XD1 :67B	2	X								
H05Z-K/0.5 mm²/BU						-FC51.3 :XD2:A4					A	○	○ B	206					/RB3.3	=PABF_MF80 +S03_MF01 -XD1 :68B	3	X								
H05Z-K/0.5 mm²/BU						-FC51.3 :XD2:A5					A	○	○ B	207					/RB3.4	=PABF_MF80 +S03_MF01 -XD1 :69B	4	X								
H05Z-K/0.5 mm²/BU						-FC51.3 :XD2:A6					A	○	○ B	208					/RB3.5	=PABF_MF80 +S03_MF01 -XD1 :70B	5	X								
H05Z-K/0.5 mm²/BU						-FC51.3 :XD2:B3					A	○	○ B	209					/RB3.5	=PABF_MF80 +S03_MF01 -XD1 :71B	6	X								
H05Z-K/0.5 mm²/BU						-FC51.3 :XD2:B4					A	○	○ B	210					/RB3.6	=PABF_MF80 +S03_MF01 -XD1 :72B	7	X								
H05Z-K/0.5 mm²/BU						-FC51.3 :XD2:B5					A	○	○ B	211					/RB3.7	=PABF_MF80 +S03_MF01 -XD1 :73B	8	X								
H05Z-K/0.5 mm²/BU						-FC51.3 :XD2:B6					A	○	○ B	212					/RB3.8	=PABF_MF80 +S03_MF01 -XD1 :74B	9	X								
H05Z-K/0.5 mm²/BU						-KF147 :11					A	○	○ B	221					/RB4.5	=PABF_MF80 +S03_MF01 -XD1 :25B	10	X								
H05Z-K/0.5 mm²/BU						-KF147 :14					A	○	○ B	222					/RB4.6	=PABF_MF80 +S03_MF01 -XD1 :75B	11	X								
H05Z-K/0.5 mm²/BU						-KF148 :14					A	○	○ B	223					/RB4.7	=PABF_MF80 +S03_MF01 -XD1 :76B	12	X								
H05Z-K/0.5 mm²/BU						-KF149 :14					A	○	○ B	224					/RB4.8	=PABF_MF80 +S03_MF01 -XD1 :77B	13	X								
H05Z-K/0.5 mm²/BU						-KF129 :11					A	○	○ B	244					/NF1.3	=PABBD_MC23 +S03_MC24 -XD1 :245B	BU		X							
											A	○	○ B	245					/NF1.5	=PABBD_MD51a +S03_MD01 -XD1 :244B	BU			X						
											A	○	○ B	246					/NF1.3	=PABBD_MC23 +S03_MC24 -XD1 :247B	BU		X							
H05Z-K/0.5 mm²/BU						-KF130 :A2					A	○	○ B	247					/NF1.5	=PABBD_MD51a +S03_MD01 -XD1 :246B	BU			X						
H05Z-K/0.5 mm²/BU						-KF129 :14					A	○	○ B	248					/NF1.4	=PABBD_MC23 +S03_MC24 -XD1 :249B	BU		X							
H05Z-K/0.5 mm²/BU						-KF130 :A1					A	○	○ B	249					/NF1.4	=PABBD_MD51a +S03_MD01 -XD1 :248B	BU			X						

Index	Remarks	Creat	Check	Appr	Date		Name	Date	Origin: /Replacement for: /Replaced by:
01	AS MANUFACTURED	KP	JD	FD	25.08.20	Creat.	Saranyoot	26.02.20	ISTANBUL METRO LINE 11
						Check.	Jirawan	26.02.20	S03 Hasdal İstasyonu
						Appr.	Ferreira	26.02.20	DC SWG, SITRAS ® DSG, DC 1500V

SIEMENS
Siemens Mobility GmbH
SMO RI EL COC TPS

INCOMING PANEL 2
TERMINALS/PLUGS
-XD1
TERMINAL CONNECTION TABLE

=PABBD_MC13b &EMA000
+S03_MC12 V / YV4

C.6633 EN
37302 SCL 1:1 A52811-E6914-S695-01 Page 4+ of 5

Legend:

Terminals Quantity: 7

Accessories		Bridges		Connection Input-Output		
Separator		Ridge bridge		Bridge	Z-Diode	Plug
Block separator		Switch bridge		NC contact	Resistor	Gate valve
Head cover		Comb bridge		NO contact	Fuse1	
Test socket				Diode	Fuse2	

Terminal	Terminal Type	Quantity
1-4,32,41-42	WAGO 2004-1201	7

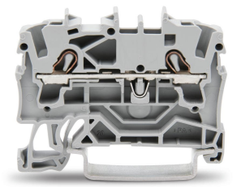

Connection information	-WDheat_S03_MC12c, ÖLFLEX CLASSIC 110H 3 x 1.5 mm² 1	2	3	4	Wire color	LEFT SIDE Terminal Destination	Terminal strip -XD2 4	3	2	1	Symbol			Name	1	2	3	4	CIRCUIT DIAGRAM	RIGHT SIDE Terminal Destination	Wire color	=PABBD_MC23+S03_MC24-AC LOOP_S03_MC24, H07Z-K 2 x 4 mm² 1	-AC LOOP_S03_MC12, H07Z-K 2 x 4 mm² 2	-WDheat_S03_MC12a, ÖLFLEX CLASSIC 110H 3 x 1.5 mm² 3	4	5	6	7	8	Connection information
H07Z-K/1.5 mm²/BK						-FC07 :2					A		B	1					/DC1.3	=PABBD_MC23 +S03_MC24 -XD2 :2B	BK	X								
											A		B	2					/DC1.5	=PABBC_MG13a +S03_MG02.1 -XD2 :1B	BK		X							
H07Z-K/1.5 mm²/BU						-FC07 :4					A		B	3					/DC1.4	=PABBD_MC23 +S03_MC24 -XD2 :4B	BU	X								
											A		B	4					/DC1.5	=PABBC_MG13a +S03_MG02.1 -XD2 :3B	BU		X							
H07Z-K/1.5 mm²/BU						-FC07 :3					A		B	32					/DC1.4	-EB01 :2	BK			X						
	X				BK	-BT01 :1					A		B	41					/DC1.3	-FC07 :1										H07Z-K/1.5 mm²/BK
	X				BK	-BT01 :2					A		B	42					/DC1.3	-EB01 :1	BK			X						

This drawing was produced electronically and requires no signature. It may not be amended manually.

Copyright © Siemens Mobility GmbH 2020 All Rights Reserved
When integrating this assembly into the plant the common rules for electrical and mechanical safety as well as the submitted documentation must be observed. Dissemination, reproduction of this drawing as well as utilization of its contents and communication thereof to others without express authorization are prohibited. Offenders will be held liable for payment of damages. All rights created by patent grant or registration of a utility model or design patent are reserved.

Index	Remarks	Creat	Check	Appr	Date		Name	Date	Origin: /Replacement for: /Replaced by:
01	AS MANUFACTURED	KP	JD	FD	25.08.20	Creat.	Saranyoot	26.02.20	ISTANBUL METRO LINE 11
						Check.	Jirawan	26.02.20	S03 Hasdal İstasyonu
						Appr.	Ferreira	26.02.20	DC SWG, SITRAS ® DSG, DC 1500V

SIEMENS
Siemens Mobility GmbH
SMO RI EL COC TPS

INCOMING PANEL 2
TERMINALS/PLUGS
-XD2
TERMINAL CONNECTION TABLE

C.6633 | EN
37302 | SCL 1:1 | A52811-E6914-S695-01 | Page 5- of 5

=PABBD_MC13b &EMA000
+S03_MC12 V / YV5